Unified Patent Court
Einheitliches Patentgericht
Juridiction unifiée du brevet

Action no: UPC 523/2025
Revocation action
Central Division (Section Munich)

# Decision

**of the Court of First Instance of the Unified Patent Court**
**Central Division (Section Munich)**
**issued on 2 September 2026**

HEADNOTES:

1. The requirement in Art. 138(1)(e) of the European Patent Convention that a European patent may be revoked if the proprietor is not entitled under Art. 60(1) should be interpreted as meaning that the proprietor does not have any rights to the patent. The burden of presentation and proof for facts establishing that the proprietor is not entitled lies with the claimant. It is therefore not sufficient for this ground of revocation to be successful that a claimant demonstrates that it has rights to parts of the subject-matter disclosed in a patent, e.g. as a co-inventor or the co-inventor's successor in title.

2. Dependent claims are part of the patent and may be used as fall-back positions in revocation actions. At least in a stand-alone revocation action, where no infringement claim has been brought and it is therefore not yet clear which claims a patent holder may decide to rely on for what purpose, a claimant therefore may have a legitimate interest in having the validity of dependent claims assessed, even if the independent claim is deemed valid. Although the Court is not generally required to take a decision regarding dependent claims in such a situation, it should at least have the discretion to do so if considered appropriate based on the circumstances of the case.

KEYWORDS:

Entitlement. Dependent claims. Wayback machine.

CLAIMANT

**Wittenstein SE**, Walter-Wittenstein-Straße 1, D-97999 Igersheim, Germany

represented by: Dr. Simon Klopschinski, rospatt Rechtsanwälte PartGmbB

DEFENDANT

**Vestas Wind Systems A/S**, Hedeager 42, DK-8200 Aarhus N, Denmark

represented by: Sebastian Ochs and Martin Hackler, Grünecker Patent- und Rechtsanwälte PartGmbB

PATENT AT ISSUE

EP 4 226 039.

PANEL/DIVISION

Panel 1 of the Central Division (Section Munich).

DECIDING JUDGES

This decision has been delivered by András Kupecz (as Presiding judge and judge-rapporteur), Daniel Severinsson (legally qualified judge) and Kerstin Roselinger (technically qualified judge).

LANGUAGE OF THE PROCEEDINGS

English.

SUBJECT MATTER OF THE PROCEEDINGS

Revocation action.

ORAL HEARING

8 July 2026.

SUMMARY OF THE FACTS

3. On 12 June April 2025, Wittenstein SE ("the Claimant") brought a revocation action in the Central Division (Section Munich) ("CD Munich") of the Unified Patent Court ("UPC") against Vestas Wind Systems A/S ("the Defendant") in relation to the European Patent with unitary effect EP 4 226 039 B1 ("the Patent").

4. The Patent is based on the international patent application WO 2022/073571, which was filed on 23 July 2021. At the European Patent Office ("EPO") the application was handled under the application number 21754915.3. The Patent claims priority of the Danish patent application DK PA202070677 of 6 October 2020. The mention of the grant of the Patent was published on 18 September 2024.

5. Notice of opposition was filed by the Claimant with the Opposition Division of the EPO. The Opposition Division's oral proceedings on 24 June 2026 resulted in the Patent being maintained in amended form, corresponding to the Defendant's auxiliary request 1 in the present case. The Opposition Division's decision has not become legally binding.

6. The Patent, which was granted in the English language, is entitled "Wind turbine power transmission system" and has the following claims:

1. A wind turbine (2), comprising:
a nacelle (8) provided on the top of a tower (12); a rotor including a hub (6) and a number of blades (4), a main shaft (16) configured to be driven by the rotor about a main axis and supported on the nacelle (8), a generator (28) having a generator rotor and generator stator, and a gear system (25) arranged to increase the rotational speed between said rotor and said generator rotor;
**characterized in that** the gear system (25) comprises:
a fixed ring gear (50),
an input member (53) coupled to or driven by the main shaft (16) having a plurality of radially movable tooth segments (52, 63) carried in guiding slots and engageable at outer ends with the ring gear (50),
a central output member (55) within the input member (53) having an outer eccentric profile acted on and driven by inner ends of radially movable tooth segments (52, 63), whereby rotary movement of the input member (53) drives the radially movable tooth segments (52, 63) through engagement with the ring gear (50) and effects rotation of the central output member (55).

2. A wind turbine according to claim 1, wherein said input member is an annular input member.

3. A wind turbine according to claim 1 or 2, wherein each radially movable tooth segment (52, 63) is connected to a tilting pad (54) through a flexible connection, preferably a

cylindrical-joint-like connection; said tilting pad (54) being adapted for sliding along said output member (55).

4. A wind turbine according to any of claims 1 to 3, wherein the output member (55) is generally circular in cross-section with at least one eccentricity, preferably at least two eccentricities.

5. A wind turbine according to any of claims 1 to 4, wherein said output member (55) is coupled to at least one further gear stage, such as one parallel gear stage.

6. A wind turbine according to any of claims 1 to 5, wherein the gear system exhibits backlash between the non-loaded flank and the rear flank of the ring gear.

7. A wind turbine according to any of claims 1 to 6, wherein said gear system (25) has a speed-increasing transmission ratio between i=10 and i=150, preferably between i=20 and i=75.

8. A wind turbine according to any of claims 1 to 7, wherein said gear system (25) has a number of radially movable tooth segments (52, 63) between 10 and 200, preferably between 40 and 100.

9. A wind turbine according to any of claims 1 to 8, wherein said gear system (25) has at least two rows of radially movable tooth segments.

10. A wind turbine according to any of claims 1 to 9, wherein said gear system (25) has at least one row of radially movable tooth segments, and wherein the number of radially movable tooth segments per row is between 12 and 60.

11. A wind turbine according to any of claims 1 to 10, wherein the diameter of said ring gear is between 1000mm and 3500 mm, preferably between 1500mm and 2500mm.

12. A wind turbine according to any of claims 1 to 11, wherein said movable tooth segments (52, 63) are cylindrical with a diameter of between 10 and 20 cm, and with a length between 20 and 50 cm.

13. A wind turbine according to any of claims 1 to 12, wherein an outer tooth flank contour (61, 62) of a tooth flank of the tooth segments and/or a flank contour (64, 65) of a toothing (13) of an internal toothing (72) of said ring gear (50) have/has, in relation to a gear set axis (M), a tooth contour which makes surface contact possible in an engagement region, wherein the surface contact is achieved by the design as a logarithmic spiral.

14. A wind turbine according to any of claims 1 to 13, wherein, regardless of a selected radius of the gear set axis (M), the outer tooth flank contour (61, 62) of the flank region of

the tooth segment (52, 63) and the flank contour of the internal toothing system of the toothing system of the ring gear correspond to a common logarithmic spiral (Ln) with a pitch angle (α).

15. A wind turbine according to any of claims 1 to 14, wherein the pitch angle (α) is between 15° and 75°, such as between 20° and 40°.

16. A wind turbine according to any of claims 1 to 15, wherein a coating is used in at least one of the following interfaces: tooth segment (52, 63) to ring gear (50), tooth segment (52, 63) to input member (53), and tilting pad (54) to output member (55).

17. A wind turbine according to any of claims 1 to 16, wherein said wind turbine (2) has a nominal power of at least 2MW, such as at least 4MW.

18. A wind turbine according to any of claims 1 to 17, further comprising:
a support structure including at least one bearing (18, 20) supporting the main shaft (16) for rotation about the main axis and constraining other movements;
wherein said gear system has a gearbox housing rigidly coupled to the support structure.

19. A wind turbine according to claim 18, wherein the support structure further includes a bearing housing (22) surrounding the at least one bearing (18, 20), the gearbox housing being suspended from said bearing housing (22).

20. A wind turbine according to claim 19, wherein the at least one bearing comprises a first bearing (18) and a second bearing (20) spaced apart within the bearing housing (22).

21. A wind turbine according to claim 19 or 20, wherein said ring gear (50) is integrated with or rigidly coupled to said bearing housing (22) and said input member (53) is integrated with or rigidly coupled to said main shaft (16).

22. A wind turbine according to claim 20 or 21, wherein said gear system (25) is fully integrated within said bearing housing (22) such that said ring gear (50), along the rotational axis of the main shaft (16), is positioned between said first bearing (18) and said second bearing (20).

POINTS IN DISPUTE AND REQUESTS OF THE PARTIES

7. The Claimant argues that the Patent is invalid on the ground that its subject-matter is not patentable within the terms of Art. 65(1) and (2) of the Agreement on a Unified Patent Court ("UPCA") in combination with Art. 138(1)(a)–(b) and (e) of the European Patent Convention ("EPC"). According to the Claimant the Patent lacks novelty (Art. 54 EPC), is not based on an inventive step (Art. 56 EPC) and does not disclose the invention in a manner sufficiently clear and complete for it to be carried out by a person skilled in the art (Art. 83 EPC). Further, the Defendant is not entitled to the Patent (Art. 60(1) EPC).

8. Based thereon, the Claimant requests that:

    1) the Patent is revoked in its entirety for the territory of the UPC Contracting Member States Austria, Belgium, Bulgaria, Denmark, Estonia, Finland, France, Germany, Italy, Latvia, Lithuania, Luxembourg, Malta, Netherlands, Portugal, Romania, Slovenia and Sweden, and

    2) the Defendant is ordered to bear the costs of the proceedings.

9. The Defendant requests that:

    - The revocation action is dismissed and the Patent is maintained as granted (main request).
    - In case the main request is not granted, that the Patent is maintained on the basis of any of auxiliary requests 1–7, to be considered in that order.
    - The Claimant is ordered to bear the costs of the proceedings.

10. Specifically with respect to the application to amend, the Claimant further requests to dismiss the Defendant´s application to amend the Patent, and thus reject all auxiliary requests.

11. The Defendant also makes several procedural requests regarding the admissibility of certain attacks and arguments from the Claimant. These requests are dealt with in the section "General introduction to UPC proceedings and procedural issues".

12. The grounds and defences as brought forward by the parties will, to the extent relevant for this decision, be discussed in detail below.

GROUNDS FOR THE DECISION

13. The revocation action is admissible. The claimed subject-matter is novel and does not follow from the state of the art in an obvious way. The Claimant has not shown that the proprietor is not entitled. The subject-matter of dependent claims 21 and 22 is not sufficiently disclosed but the Patent is maintained according to the Defendant's auxiliary request 1 where these claims are deleted.

**I. (International) jurisdiction and admissibility of the revocation action**

14. Pursuant to Art. 32(1)(d) UPCA, the UPC shall have exclusive competence for actions for revocation of (European) patents. In view of this exclusive competence, and since no opt-out from the exclusive competence of the UPC in relation to the Patent is in effect (cf. Article 83(3) UPCA), the UPC – as a common court of the Member States to the UPCA (Art. 71a of Regulation (EU) No. 1215/2012 ("Brussels Ia") – has international jurisdiction based on Art. 24(4) in connection with Art. 71b Brussels Ia.

15. The Patent's first International Patent Classification is F03D Transmission of mechanical power. The CD Munich is therefore competent in respect of the present Revocation action on the basis of Art. 33(4) UPCA in connection with Rule 17.3 of the Rules of Procedure of the Unified Patent Court ("RoP") and Annex II to the UPCA.

16. The revocation action is directed against the registered proprietor of the Patent (Rules 8.6 and 42 RoP). Thus, no concerns as to the admissibility exist in this respect.

**II. General introduction to UPC proceedings and procedural issues**

*Introduction*

17. It follows from the UPCA that decisions on the merits may only be based on grounds, facts and evidence, which were submitted by the parties or introduced into the procedure by an order of the Court and on which the parties have had an opportunity to present their comments (Art. 76(2) UPCA). Even though it is for the Court to actively manage a case in accordance with the RoP, this must not impair the freedom of the parties to determine the subject-matter of, and the supporting evidence for, their case (Art. 43 UPCA).

18. It is further established case law that, under the front-loaded procedural system of the UPC, the parties are required to set out their full case as early as possible (see RoP, preamble at 7, and also e.g. Court of Appeal, UPC_CoA 71/2025, decision of 29 December 2025, *NJOY/VMR.*, paras. 24 and 27). However, not every new argument changes the nature or scope of the dispute so that it constitutes an amendment of a case requiring a party to apply for leave under Rule 263 RoP. Further, whether a new argument is admissible depends on the circumstances of the case, including the reasons why a party had not already raised the argument and the procedural opportunities for the other party to respond to the new argument (see Court of Appeal, UPC_456/2024, order of 21 November 2024, *OrthoApnea*, paras. 23 and 26–27).

*Admissibility of the Claimant's new attacks and arguments*

19. The Defendant requests that the Court disregard as late-filed the attacks on inventive step based on the Wikipedia article GRU5 as a starting point or the attacks based on D20 or D11 as starting points in combination with GRU5 (Rule 9.2 RoP). These attacks were submitted by the Claimant in the Reply to the Defence to revocation but should, according to the Defendant, have been included in the Statement for revocation.

20. The Defendant also requests that the Court disregard as late-filed the following arguments submitted by the Claimant in the Rejoinder to the Reply to the Defence to the Application to amend the patent (Rule 9.2 RoP).

(i) The arguments under section "A. Preliminary Remarks", p. 4–5.
(ii) The arguments under section "B I. Auxiliary Request 1", p. 5–14, including the new attack D11 in combination with D15.
(iii) The arguments under section "B II. Auxiliary Request 2", p. 14–20.
(iv) The arguments under section "B VII. D20: Disclosed with Figure / At Least Test is Undisputed", p. 27–28.
(v) The arguments under section "C. No Entitlement", p. 28–33.

21. According to the Defendant, the arguments under sections A, B VII. and C do not relate to the Defendant's auxiliary requests. Further, the arguments under section B I. Auxiliary Request 1 and B II. Auxiliary Request 2 do in fact not relate to the Defendant's auxiliary requests either, but are instead related to the alleged lack of inventiveness of claim 1 of the Patent as granted (Rule 9.2 RoP).

22. The Claimant is of the opinion that the new attacks and arguments should be admitted.

23. According to the Court, the Claimant's new attacks based on GRU5 do not change the nature or scope of the dispute. GRU5 is a Wikipedia article which was submitted by the Defendant in its Defence to revocation as evidence for the skilled person's common general knowledge. The Claimant then used GRU5 to develop further attacks on the patent, either as a starting point or in combination with the already filed documents D20 or D11 as starting points. The Claimant's new attacks in the Reply to the Defence to revocation are thus based on a document submitted by the Defendant which undisputedly was part of the skilled person's common general knowledge. The Defendant has also had the opportunity to respond to these attacks in the Rejoinder to the Reply to the Defence to revocation and at the oral hearing. Therefore, under the circumstances of the present case, the Claimant's new attacks submitted with the Reply to the Defence to revocation are not to be disregarded.

24. With regard to the Claimant's new arguments submitted with the Rejoinder to the Reply to the Defence to the Application to amend the patent, the Court observes that the arguments under section "B II. Auxiliary Request 2", p. 14–18 respond in general to the Defendant's arguments regarding auxiliary request 2 in the Reply to the Defence to the Application to amend the patent. The Claimant's arguments under section "B II. Auxiliary Request 2, p. 14–18" are therefore not to be disregarded either.

25. The Court reaches the opposite conclusion in relation to the Claimant's arguments under sections "A. Preliminary Remarks", "B I. Auxiliary Request 1", including the new attack D11 in combination with D15, "B II. Auxiliary Request 2", p. 19–20, "B VII. D20: Disclosed with Figure / At Least Test is Undisputed" and "C. No Entitlement". These parts of the Claimant's submission do not respond to arguments raised by the Defendant in the Rejoinder to the

Reply to the Defence to revocation and the Reply to the Defence to the Application to amend the patent and/or could and, absent any convincing arguments to the contrary, should have been included in the Statement for revocation or the Reply to the Defence to revocation. The Claimant's substantive arguments in these sections, including the new attack D11 in combination with D15, are therefore to be disregarded as late-filed (cf. Rule 43.3 RoP).

**III. The Patent and its interpretation**

*Introduction*

26. The Patent relates to power transmission systems for wind turbines, more specifically wind turbines comprising a new type of gearbox (paragraph [0001] of the description, hereinafter only indicated with the respective paragraph numbers).

27. Wind turbines typically include a rotor with large blades driven by the wind. The blades convert the kinetic energy of the wind into rotational mechanical energy. The mechanical energy usually drives one or more generators to produce electrical power. Thus, wind turbines include a power transmission system to process and convert the rotational mechanical energy into electrical energy. (Para. [0002]).

28. In wind turbines, it is often necessary to increase the rotational speed of the rotor to the speed required by the generator. For that purpose, a gear box is provided between rotor and generator. (Para. [0003]).

29. The gear box has the task to transform an input of high torque and low speed into a low torque and high speed output. This task requires rather voluminous gear boxes with two or three gear stages, which are both costly and heavy. The object of the invention of the Patent is to find alternative types of gear boxes that provide a higher gear ratio and require less volume and weight while fulfilling the requirements of the high torque conditions provided by the rotor. (Para. [0004]).

30. The background section of the Patent mentions as prior art two patent documents, US 8656809 B2 and US 8256327B2. These prior art documents disclose an alternative type of gear system including radially moving teeth which is utilised to reduce a high electrical motor speed down to the low speed needed for e.g. a tool machine function ("step-down"). In the Patent this technology is referred to as "radial-moving-teeth design". (Paras. [0005] and [0045]).

31. The invention according to the patent provides a gear system with a radial-moving-teeth design technology which can be used for step-up gearing, which is particularly advantageous for use in wind turbines to obtain compact wind turbine transmission systems (para. [0006]).

32. Claim 1 of the Patent can be broken down in the following features, which has not been disputed by the parties:

**F1.1** A wind turbine (2), comprising:
**F1.1a** a nacelle (8) provided on the top of a tower (12);
**F1.1b** a rotor including a hub (6) and a number of blades (4),
**F1.1c** a main shaft (16) configured to be driven by the rotor about a main axis and supported on the nacelle (8),
**F1.1d** a generator (28) having a generator rotor and generator stator, and a gear system (25) arranged to increase the rotational speed between said rotor and said generator rotor;
**F1.2 characterized in that** the gear system (25) comprises:
**F1.2a** a fixed ring gear (50),
**F1.2b** an input member (53) coupled to or driven by the main shaft (16) having a plurality of radially movable tooth segments (52, 63) carried in guiding slots and engageable at outer ends with the ring gear (50),
**F1.2c** a central output member (55) within the input member (53) having an outer eccentric profile acted on and driven by inner ends of radially movable tooth segments (52, 63),
**F1.2d** whereby rotary movement of the input member (53) drives the radially movable tooth segments (52, 63) through engagement with the ring gear (50) and effects rotation of the central output member (55).

33. The principles applicable to claim construction have been set out by the Court of Appeal in its final order in UPC_CoA_335/2023 (order of 26 February 2024, as rectified, *Nanostring/10x Genomics*). The Court of Appeal has held that the patent claim is not only the starting point, but the decisive basis for determining the protective scope of a European patent under Art. 69 EPC in conjunction with the Protocol on the Interpretation of Art. 69 EPC. The interpretation of a patent claim does not depend solely on the strict, literal meaning of the wording used. Rather, the description and the drawings must always be used as explanatory aids for the interpretation of the patent claim and not only to resolve any ambiguities in the patent claim. However, this does not mean that the patent claim merely serves as a guideline and that its subject-matter also extends to what, after examination of the description and drawings, appears to be the subject-matter for which the patent proprietor seeks protection.

34. The patent claim is to be interpreted from the point of view of a person skilled in the art. In applying these principles, the aim is to combine adequate protection for the patent proprietor with sufficient legal certainty for third parties. These principles for the interpretation of a patent claim apply equally to the assessment of the infringement and the validity of a European patent.

35. The skilled person always interprets features in the light of the claim as a whole (see e.g. UPC_CoA_768/2024, order of 30 April 2025, *Insulet/EOFlow*). From the function of the individual features in the context of the patent claim as a whole, the skilled person will deduce which technical function these features actually have individually and as a whole. With regard to the terminology used in a patent, this can lead to the skilled person

attributing a meaning to a term that differs from its general usage. The patent specification can define terms independently and may thus constitute its own lexicon with regard to the terms used therein (see e.g. Court of Appeal, UPC_CoA_622/2025 and 623/2025, decision of 27 May 2026, *Hefei/Grundfos*, para. 36).

*The person skilled in the art*

36. The parties have suggested similar definitions of the person skilled in the art in the technical field of the Patent. The Claimant has defined the skilled person as a mechanical engineer having several years of experience especially in the field of transmission gearings with a focus on wind turbines. The Defendant has defined the skilled person as a mechanical engineer having several years of experience in the field of wind turbines, in particular in the field of gear systems used in the power transmission system of wind turbines.

37. According to the Court the skilled person in the technical field of the Patent should be defined as a mechanical engineer having several years of experience in the field of power transmission systems for wind turbines, including gear systems.

*Interpretation of the claim 1 of the Patent from the perspective of the skilled person*

38. There is no disagreement between the parties as to the interpretation of claim 1 of the Patent.

39. Features F1.1–F1.1d define the components of a wind turbine (2), which were known in the prior art at the relevant date (reference numbers in this section corresponds to the reference numbers of Fig. 1–5 of the Patent, which are shown below).

40. Feature F1.1a defines a tower (12) with a nacelle (8) provided on the top. According to feature F1.1b the nacelle comprises a rotor with a hub (6) and a number of blades (4). Feature F1.1c defines the main shaft (16) which is driven by the rotor. Feature F1.1d describes a generator (28) having a generator rotor and generator stator, and a gear system (25) arranged to increase the rotational speed between said rotor and stator. (Paras. [0041] and [0042]).

41. Fig. 1 of the Patent shows one example of a wind turbine with the features F.1–F1.1d (para. [0041]).

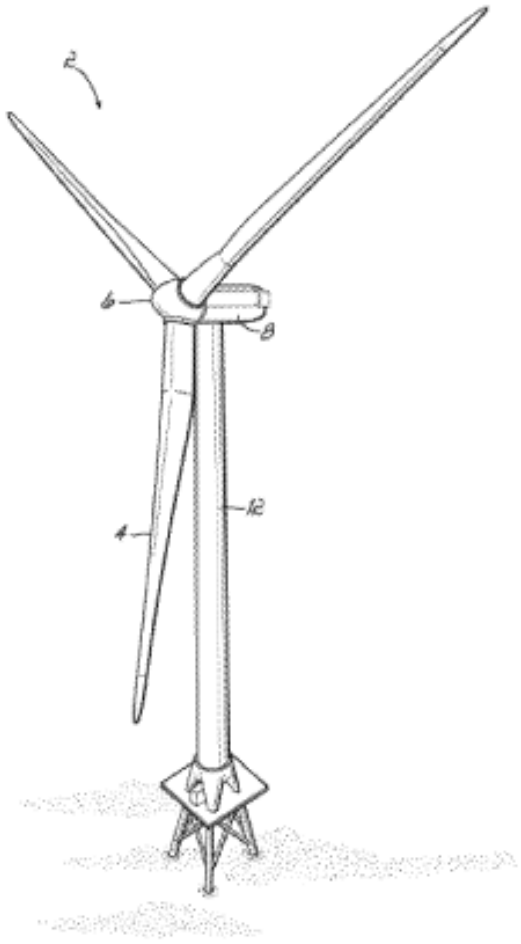

Figure 1

42. Figs. 2 and 3 of the Patent show a perspective view and a cross-sectional view of a prior art power transmission system (para. [0042], Figs. shown below). Fig. 3 discloses that the gear box uses a planet carrier of the first planetary stage wherein the ring gear is fixed to the housing which results in the sun gear increasing the rotational speed to transfer to the next stage of the gear box (para. [0043]).

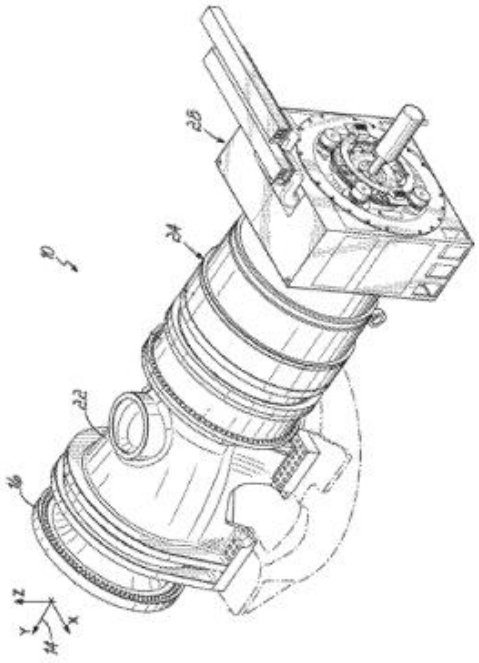

Figure 2

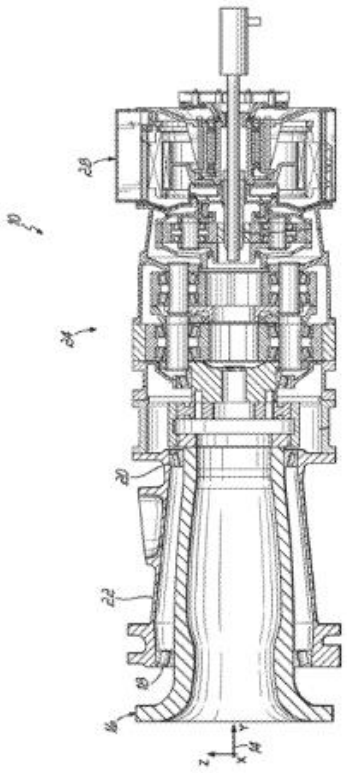

Figure 3

43. The characterizing features F1.2–F1.2d further define both the functioning and the physical and spatial configuration of the components of the claimed gear system of feature F.1.1d.

44. Fig. 4 of the Patent shows a power transmission system similar to the prior art system in Fig. 2, but now with the prior art gearbox replaced with a gear system according to the present invention including the radial-moving-teeth design gear (para. [0044]; see Fig. 4 below).

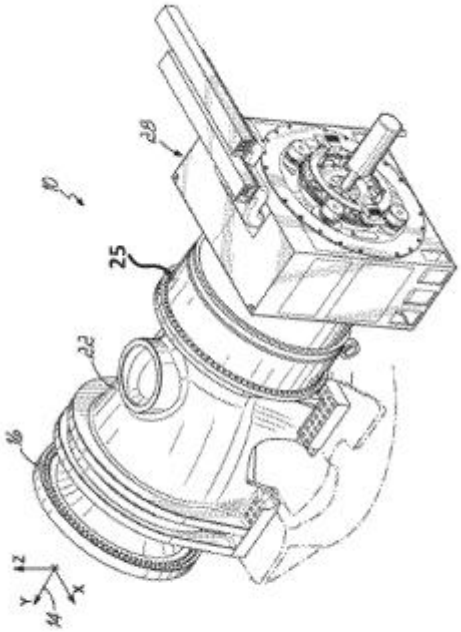


Figure 4

45. Fig. 5 shows a part of a coaxial gear set with a radial-moving-teeth design gear which is described in the context of an embodiment of the invention in which the radial-moving-teeth design gear is used to increase the relative rotational speed between the hub and the generator rotor (para. [0046]; see Fig. 5 below).

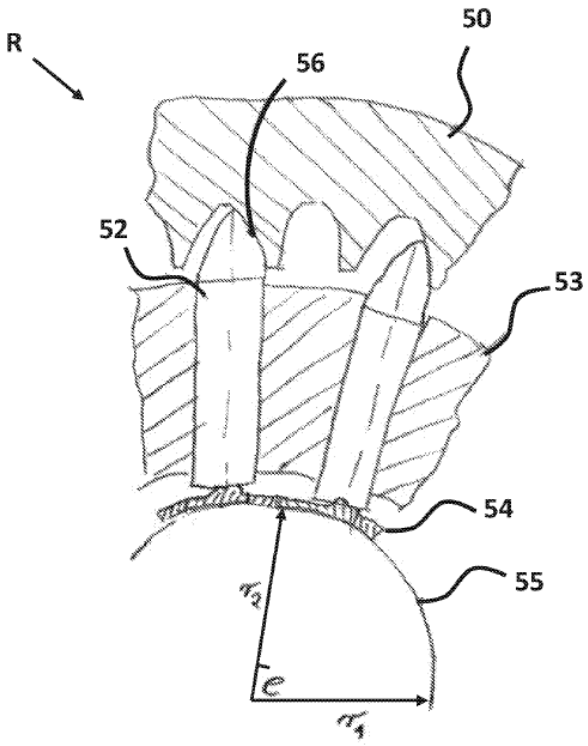


46. According to feature F1.2a the gear system comprises a fixed ring gear (50). The skilled person understands that the fixed ring gear has inward facing teeth on its inner circumference (paras. [0047] and [0058] and Figs. 5 and 7).

47. Feature F1.2b describes an input member (tooth carrier (53)) coupled to or driven by the main shaft (16) having a plurality of radially movable tooth segments (52) carried in guiding slots and engageable at outer ends with the ring gear (50). The guiding slots are located in the tooth carrier (para. [0047]). The tooth carrier represents the input shaft and is physically connected to and rotates with the same rotational speed as the main shaft (para. [0048]).

48. Feature F1.2c specifies that a central output member (eccentric shaft (55)) is located within the input member (53) of feature F1.2b and that said central output member has an outer eccentric profile acted on and driven by inner ends of the radially movable tooth segments (52). Feature F1.2d describes how rotary movement of the input member (53) of feature F1.2b drives the radially movable tooth segments (52) through engagement with the ring gear (50) and effects rotation of the central output member (55) of feature F1.2c. In the described embodiment of the invention the output member (55) rotates with an increased speed as compared to the input member (53).

49. Dependent claims 2–22 either directly or indirectly refer back to claim 1 and specify further features.

**IV. Novelty**

*Introduction*

50. The Claimant argues that claim 1 of the Patent lacks novelty over D20 (an article with the title "Wittenstein gewinnt Hermes Award" which, according to the Claimant, was published online on 13 April 2015) and D11 ("FVA Informationstagung", slides from the presentation "Das Galaxie Getriebesystem Aufbruch in neue Möglichkeitssphären" by the Claimant's employee Mr. [redacted] on 4 December 2018 at a conference in Würzburg).

51. For the purposes of Art. 54 EPC, an invention shall be considered to be new if it does not form part of the state of the art. The state of the art, in accordance with Art. 54(2) EPC shall be held to comprise everything made available to the public by means of a written or oral description, by use, or in any other way, before the date of filing of the European patent application (or when applicable the priority date).

52. The assessment of novelty within the meaning of Art. 54(1) EPC requires the determination of the whole content of the prior publication. It is decisive whether the subject-matter of the claim with all its features is directly and unambiguously disclosed in the prior art citation (see Court of Appeal, UPC_CoA_182/2024, order of 25 September 2024, *Mammut/Ortovox*, para. 123). A feature may also be disclosed implicitly, but this requires that that the skilled person would objectively consider such feature to be necessarily implied in the explicitly disclosed content, i.e. matter that is a clear and unambiguous consequence of what is explicitly mentioned, shall also be considered as part of its content. Knowledge that a skilled person only acquires as a result of further deliberation beyond this cannot be considered a direct and unambiguous disclosure (see Court of Appeal, UPC_CoA_312/2025 a.o., decision of 2 June 2026, *Kodak/FUJIFILM*, para. 123).

53. The burden and presentation of proof with regard to the facts from which the lack of validity of the patent is derived and other circumstances favourable to the invalidity or revocation lies with the claimant in a revocation action (see e.g. Court of Appeal, UPC_CoA_464/2024 a.o., decision of 25 November 2025, *Meril/Edwards*, Headnote 6). Accordingly, the burden of proof that certain information was made available to the public before the application date or the priority date of the patent in suit (also referred to as the relevant date), lies with the party claiming that such information is novelty destroying (cf. Court of Appeal in *Kodak/FUJIFILM*, cited above, para. 160).

*D20*

<u>Public availability</u>

54. The first steps for the Court are to assess whether D20 was made publicly available on the internet prior to the priority date of the Patent and, if so, what the content of D20 was at the time of publication.

55. The Claimant argues that D20 was published online, without any restrictions, on 13 April 2015 and that the article included a figure showing parts of a gear system (see below). The Claimant refers to a screenshot (D20b) from the so-called Wayback Machine (web.archive.org) taken from a link filed by the Defendant in the Defence to revocation. According to that screenshot D20 was published before 10 May 2016.

56. The Defendant contests that D20 is prior art to the Patent. Even if the article was published before the relevant date there is no evidence that it was made available to persons who were not obliged to confidentiality. It is possible to provide webpages that require authentication, e.g. by means of a username and a password. Further, the Claimant's screenshot is taken from a link which refers to an HTML file and images are not part of that file. The Defendant has analysed the data used by the Wayback Machine, which does not support that the figure showing parts of a gear system was published before the relevant date.

57. According to the Court, screenshots from the Wayback Machine can in many cases be accepted as sufficient evidence for the public availability of a prior art disclosure that was published online. It is generally known that the Wayback Machine, which is operated by the non-profit organisation Internet Archive, is a digital archive that crawls the internet and captures and stores snapshots of websites over time, allowing users to access past versions of web pages (cf. LD Vienna, UPC_CFI_26/2025 and UPC_CFI_375/2025, decision of 19 February 2026, *Messerle/Sabert*, para. 53, and Case Law of the Boards of Appeal of the EPO, 11th ed., 2025, Chapter I.C.3.2.3(c)).

58. There are no indications that access to the article was restricted. Such restrictions also do not seem likely since the article does not contain sensitive or confidential information. On the contrary: already the headline, which translates to "Wittenstein wins Hermes Award", suggests that D20 is a promotional article which is meant to be accessible by the general public. At least the text of D20 is therefore prior art to the Patent. This has also not been contested by the Defendant in a substantiated manner.

59. With regard to the figure showing parts of a gear system, the Claimant submitted screen shots from the Wayback Machine to support that the figure was included in the article before 10 May 2016 (Exhibits D20a-c). The Defendant pointed to certain sources of error when using the Wayback Machine for images and argued that the figure had likely been uploaded at a later point than the article, after the priority date of the Patent (6 October 2020).

60. According to the Court the screenshots from the Wayback Machine submitted by the Claimant support that the image was already included with the original publication of the article. It also seems plausible that the article did contain a figure showing parts of the Galaxie gear system, which was the topic of the article. The Defendant's screenshot of the article, GRU3, does not show any pictures but refers to a photo gallery where the first of three pictures has the following text (translated to English): "No gears required: In the Wittenstein – Galaxie – drive system, individual teeth handle power transmission within the

gearbox.”. This text corresponds well with the figure showing parts of a gear system which the Claimant argues was published with the article.

61. All these circumstances support the Claimant’s assertion that the full version of D20 with the figure showing parts of a gear system was published online before 10 May 2016, and thus made available to the public before the relevant date. However, as follows from the Court’s assessment below, D20 is not novelty-destroying even if it were assumed to have been made publicly available with the disputed figure before the priority date. It can therefore ultimately be left open whether the Claimant has established with sufficient certainty that the figure showing parts of a gear system is prior art to the Patent.

Novelty assessment

62. As mentioned above D20 is an article reporting on an award win for Wittenstein. The article describes the Galaxie gear system. For the purposes of assessing whether D20 is novelty-destroying, the Court assumes that the whole article, including the figure showing parts of a gear system, is prior art to the Patent.

63. The Claimant argues that the skilled person directly and unambiguously derives from D20 all information needed to build a wind turbine with a coaxial gear system as claimed in claim 1 of the patent. The reference in the article to wind turbines (German: “Windenergieanlagen”) implies to the skilled person the typical parts of a wind turbine as known in the prior art, i.e. a nacelle (feature F1.1a), a rotor including a hub and blades (feature F1.1b), a main shaft (feature F1.1c) and a generator coupled to the hub via a gear system (feature F1.1d). The reference to wind turbines is also made in the context of the gearbox high efficiency, which makes it clear that the intended use is in the drive train.

64. According to the Claimant the gearing partially shown in the figure of D20 further comprises the features F1.2–F1.2d (see figure below with the Claimant’s added reference signs). According to the Claimant the figure discloses a gear system with a fixed ring gear (50) (features F1.2 and F1.2a) and an input member (53) and a central output member (55) with the further characteristics of features F1.2b–F1.2d. Additionally the skilled person had access to the features of the Galaxie gear system through numerous publications and public patent applications.




Figure of D20 with added reference signs

65. The Defendant argues that D20 does not disclose a wind turbine as defined in the preamble of claim 1 of the Patent. The German term "Windenergieanlagen" does not translate to "wind turbine" but to the broader term "wind power plant". Even if the skilled person would have construed D20 as referring to wind turbines, it does at least not disclose feature F1.1c ("a main shaft (16) configured to be driven by the rotor about a main axis and supported on the nacelle (8)") and feature F1.1d ("a generator (28) having a generator rotor and a generator stator, and a gear system (25) arranged to increase the rotational speed between said rotor and said generator rotor").

66. The Defendant further argues that it was common general knowledge at the relevant date that wind turbines did not necessarily have neither a shaft nor a gear system arranged to increase the rotational speed between the rotor and the generator rotor. For example, D15 discusses the possibility of eliminating the rotor shaft and replacing it with a large diameter bearing arrangement (p. 2, ll. 8–11) and the Wikipedia article GRU5 discloses wind turbines where the rotor shaft is attached directly to the generator. Further, gear systems in wind turbines were not only used to increase the rotational speed between the rotor and the generator rotor but also for rotating the rotor blades around their longitudinal axes for pitch control, and for rotating the nacelle and the rotor around the longitudinal axis of the tower for aligning the wind turbine to the wind direction (yawing) (see example.g. Tony Burton et. al., Wind Energy Handbook, 2001, GRU7).

67. The Defendant additionally holds that D20 does not disclose the characterizing features F1.2–F1.2d. First, the Claimant's arguments regarding the skilled person's interpretation of the figure of D20 with added reference signs and a reference to para. [0047] of the Patent are based on hindsight. The skilled person studying D20 does not know the invention of the Patent. Neither the text nor the figure of D20 allows the skilled person to understand the structure and functioning of the gearing. D20 does not disclose a fixed ring gear. It is further not disclosed how the gearing is driven, which parts of the gearing are used as input and output members and which parts of the gearing are teeth. Finally, the disclosure of D20 as a

prior art document should be considered in isolation, especially since it does not include any explicit references to other publications describing the details of the Galaxie gear system.

68. The Court first notes that the topic of D20 is a specific gear system (Galaxie). There is no disclosure of the configuration of a wind turbine according to features F1.1–F1.1d of the Patent. However, D20 mentions that the gearbox is suitable for use in machine tools, robots, (in German) "Windenergieanlagen" and textile machines, among other things. It is common ground that the basic structure of a wind turbine was generally known at the relevant date. However, regardless of whether the term "Windenergieanlagen" refers more generally to wind power plants or specifically to wind turbines, this statement is very brief and general and one of several examples of suitable areas. The statement therefore does not equate to a direct and unambiguous disclosure of an actual wind turbine as required by the claims of the Patent.

69. The Court further observes that D20 does not specify where and how the Galaxie gearbox is to be used in a wind turbine. D20 is completely silent about the internal parts of a wind turbine and there is no disclosure of either a main shaft configured to be driven by the rotor about a main axis and supported on the nacelle or a gear system arranged to increase the rotational speed between the rotor and the generator rotor of a wind turbine (features F1.1c and F1.1d). As pointed out by the Defendant, wind turbines without a main shaft were known at the relevant date (see also the Claimant's Technical Background in the Statement for revocation). It was further known that gear systems in wind turbines can also have other functions, such as in the mechanism to rotate the nacelle with respect to the tower to keep the turbine facing the wind (yawing) or in pitch control to rotate the rotor blades around their longitudinal axis at a relatively low speed.

70. Against this background the Court finds that D20 as a whole at least does not disclose, either explicitly or implicitly, features F1.1c and F1.1d to the skilled person. Already for this reason D20 is not novelty destroying.

71. As regards features F1.2–F1.2d of claim 1 of the Patent, the Court further observes that D20 does not describe the details of the Galaxie gear system. There is only a figure (see above) showing certain parts of the gear system with reference numbers added by the Claimant. These reference numbers are from the Patent and thus clearly based on hindsight. The figure also has a short description according to which the individual teeth are arranged in segments and are driven by a polygon and a roller bearing, as well as by a segmented outer bearing ring (German "Die Einzelzähne sind segmentiert angeordnet und werden durch einen Polygon und ein Wälzlager sowie durch einen segmentierten Lageraußenring angetrieben."). There is no further information in D20 regarding the functioning of the gear system and D20 does not describe how the various parts of the gear system are arranged relative to each other (cf. Court of Appeal, UPC_CoA_789/2025 and UPC_CoA_813/2025, order of 6 March 2026, *Dyson/Dreame*, para. 35). As pointed out by the Defendant, D20 does not refer to other specific documents providing more detailed information regarding the Galaxie gear

system and there are no reasons why the skilled person would read such information into the disclosure of D20.

72. The Court agrees with the Claimant that the skilled person would understand the part of the figure with the Claimant's added reference number (50) as a ring gear. However, D20 further discloses that the polygon with the eccentric profile (Claimant's added reference number (55) in the figure) acts as an *input* member and *drives* the teeth. This contradicts claim 1 of the Patent where, according to features F1.2c and F1.2d, the eccentric shaft acts as an *output* member and *is driven* by the teeth.

73. Against this background it is clear to the Court that D20 additionally does not directly and unambiguously disclose features F1.2c and F1.2d. Also for this reason claim 1 of the Patent is novel over D20.

*D11*

74. D11 (FVA Informationstagung) are the slides from a presentation "Das Galaxie Getriebesystem – Aufbruch in neue Möglichkeitssphären" (English "The Galaxie gear system – departure into new spheres of possibility"). It is undisputed between the parties that the presentation was held and the slides were shown by the Claimant's employee Mr. [redacted] on 4 December 2018 at a conference in Würzburg, which means that D11 is prior art to the Patent.

75. The Claimant argues that D11 points to the use of a coaxial gear system with radially moving tooth segments in wind turbines according to claim 1 of the Patent. On p. 23 of the presentation there is a reference in the presentation to "wind power" (German "Windkraft") which means wind turbines. According to the Claimant, for the skilled person this implies the typical parts of a wind turbine as known in the prior art, i.e. a nacelle (feature F1.1a), a rotor including a hub and blades (feature 1.1b), a main shaft (feature 1.1c) and a generator coupled to the hub via a gear system (feature F1.1d). There is also a similar figure as in D20 that shows the features F1.2–F1.2d (see figure and reference to "Windkraft" below).

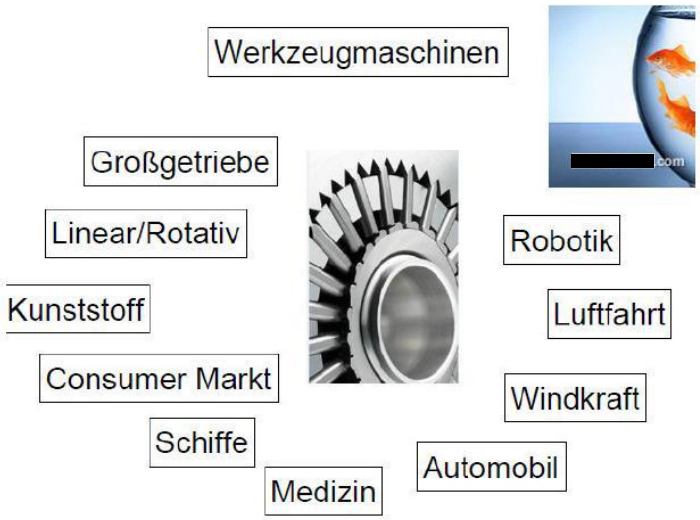


**Page 23 of D11**

76. On p. 18 of the presentation there is another figure which provides further information about the coaxial gear system (see figure below with the Claimant's added reference signs).




**Left figure of page 18 of D11 with added reference signs**

77. According to the Claimant, during the presentation Mr. [redacted] explained in detail how the gear system functions including that it works as either a step-up gearing (increasing slower input speed to faster output speed) or as a step-down gearing, depending on whether the member (53) or the central output member (55) is used as the input element or the output element respectively. Mr. [redacted] also pointed to the fact that the gear systems disclosed in D11 may be used in both directions, e.g. using the central cam disc as input member and the tooth carrier as output member, or vice versa. The Claimant has submitted a witness statement from Mr. [redacted] to support these arguments (Exhibit WS1).

78. The Defendant argues that D20 does not disclose any of the features of claim 1 of the Patent. First, D11 does not disclose a wind turbine as defined in claim 1 of the Patent. The German term "Windkraft" does not translate to "wind turbine" but to the broader term "wind power". Even if a skilled person would have understood that the Galaxie gear system could be used in wind turbines, following the same line of argumentation as for D20 at least features F1.1c and F1.1d were not disclosed. Further, since the figure on p. 23 of D11 corresponds to the figure in D20, it does not disclose features F1.2–F1.2d of claim 1 of the Patent following the same line of argumentation as for D20. The figure on p. 18 of D11 also lacks any further explanation of the individual components and their function and does not disclose these features.

79. The Defendant disputes that Mr. [redacted] disclosed any additional relevant information during his presentation, which according to the agenda only lasted 30 minutes and covered many topics other than the Galaxie gear system. The Defendant's employee and inventor of the Patent, Mr. [redacted] who was present has no recollection of Mr. [redacted] disclosing any information regarding use of the Galaxie gear system in wind turbines or the possibility of using the gear system as a step-up mechanism. The Defendant has submitted a witness statement from Mr. [redacted] to support these arguments (Exhibit GRU8).

80. The Court makes the following considerations when it comes to the oral information allegedly disclosed by Mr. [redacted] during his presentation. In general, the burden of proof for which information was made available to the public lies with the Claimant (see considerations above). Specifically in relation to disclosures in oral form during presentations, it is necessary to substantiate, and when contested prove, that the allegedly disclosed information was presented in a way which the audience could understand (cf. Case Law of the Boards of Appeal of the EPO, Chapter I.C.3.2.2). The Court shall evaluate any evidence presented freely and independently (Art. 76(3) UPCA).

81. In the present case, the presentation was held more than six years before Mr. [redacted] witness statement was drafted. After such a long time, it is generally hard to remember exactly what was presented, especially since Mr. [redacted] at the time (undisputedly) held different presentations about the Galaxie gear system in different venues before different audiences. The presentation D11 itself does not make any references to the gear system being used as either a step-down or step-up gearing. Further, according to the conference agenda Mr. [redacted] presentation only lasted 30 minutes and the 26 slides covered several topics. The Claimant has not submitted any additional supporting evidence beyond the declaration by Mr. [redacted] himself. Already for these reasons, it is difficult for the Claimant to convince the Court with the required degree of certainty that the alleged additional information regarding the Galaxie gear system was publicly disclosed.

82. The Court further considers that Mr. [redacted] witness statement is rather vague. For example, the statement makes general references to features of the Patent, with added corresponding reference signs to figures in the presentation, instead of providing detailed accounts of which specific information was actually disclosed at what point in presenting the slides to the

audience. In addition, Mr. [redacted] has not even asserted that he discussed using the Galaxie gear system as a step-up gear for use in the power transmission system of a wind turbine.

83. There is also the witness statement from Mr. [redacted] according to which he does not remember [redacted] discussing the use of the Galaxie gear system in wind turbines or the possibility of using the gear system as a step-up mechanism. The Court sees no reason to value Mr. [redacted] witness statement as more credible and reliable than Mr. [redacted]

84. Against this background the Claimant has not sufficiently substantiated, let alone proven, that any relevant additional information was disclosed to the public during Mr. [redacted] presentation.

85. As for the Power Point presentation D11 itself, the Court notes that approximately the first half of the slides relate to innovation in general and the second half to the benefits of the Galaxie gear system. There is in any event no explicit disclosure of the configuration of a wind turbine according to features F1.1–F1.1d of the Patent. D11 mentions that the Galaxie gearbox is suitable for many different broadly defined markets, including wind power ("Windkraft").

86. However, D11 does not specify where in a wind turbine the Galaxie gearbox would be used. D11 is silent about the internal parts of a wind turbine and there is no disclosure of either a main shaft configured to be driven by the rotor about a main axis and supported on the nacelle or a gear system arranged to increase the rotational speed between the rotor and the generator rotor of a wind turbine (features F1.1c and F1.1d). As already noted above, wind turbines without a main shaft were known at the relevant date. It was further known that gear systems in wind turbines can also have other functions, such as in the mechanism to rotate the nacelle with respect to the tower to keep the turbine facing the wind (yawing) or in pitch control to rotate the rotor blades around their longitudinal axis at a relatively low speed.

87. Against this background the Court finds that D11 as a whole at least does not disclose, either explicitly or implicitly, features F1.1c and F1.1d to the skilled person. Already for this reason D11 is not novelty destroying.

88. As regards features F1.2–F1.2d of claim 1 of the Patent, the Claimant has particularly referred to two figures of D11 showing certain parts of the Galaxie gear system. The figure on p. 23 of D11 is almost identical to the figure in D20 (see above), but without any additional information. The figure on p. 18 (see above) is similar and has no relevant additional information regarding the configuration of the gear system. Again, the Claimant has, based on hindsight, added reference numbers from the Patent to the figure.

89. Just as for D20, the Court agrees with the Claimant that D11 discloses a ring gear (see the two referred figures and also the similar figures on p. 14 and 15). However, D11 does not explain the functioning of the gear system and it does not describe how the various parts of

the gear system are arranged relative to each other (cf. Court of Appeal in *Dyson/Dreame*, cited above, para. 35). For example, D11 is silent about which part of the gear system are used as input member and output member. According to the Court it is thus only with hindsight that the skilled person would be able to identify features F1.2b–F1.2d from the disclosure of D11 as a whole. Also for this reason claim 1 of the Patent is novel over D11.

**V. Inventive step**

*Introduction*

90. The Claimant argues that the subject-matter of claim 1 of the Patent lacks inventive step over the following prior art.

(i) D15 (WO 2003/031811 A2) in combination with D14a (DE 341 053), D20 or D11,
(ii) D20 in combination with D14a or GRU5 (Wikipedia Article "Wind turbine design"),
(iii) GRU5 in combination with D20, D14a or D11, or
(iv) D11 in combination with common general knowledge/GRU5.

91. It is undisputed that D11, D14a, D15, GRU5 and the text of D20 are prior art to the patent. Just as for the assessment of novelty it can be left open whether the Claimant has established with sufficient certainty that the figure showing parts of a gear system in D20 is prior art to the Patent, but the Court assumes that it is for the purposes of the assessment of inventive step below.

92. A European patent is only validly granted for an invention if – apart from other requirements – it involves an inventive step. An invention shall be considered as involving an inventive step if, having regard to the state of the art, it is not obvious to a person skilled in the art (Art. 56 EPC).

93. The approach to assessment of inventive step taken by the UPC has been provided by the Court of Appeal in its decisions of 25 November 2025 in *Amgen/Sanofi*, (UPC_CoA_528/2024 and UPC_CoA_529/2024) and *Meril/Edwards* (UPC_CoA_464/2024 et al.) with further references to e.g. the order of the Court of Appeal in the *Nanostring/10X Genomics* case (UPC_CoA_335/2023, order of 26 February 2024, as rectified).

94. In the UPC approach, it first has to be established what the object of the invention is, i.e. the objective problem. This must be assessed from the perspective of the skilled person, with its common general knowledge, as at the application or priority date (also referred to as the relevant date) of the patent. This must be done by establishing what the invention adds to the state of the art, not by looking at the individual features of the claim, but by comparing the claim as a whole in context of the description and the drawings, thus also considering the inventive concept underlying the invention (the technical teaching), which must be based on the technical effect(s) that the skilled person on the basis of the application understands is (are) achieved with the claimed invention.

95. In order to avoid hindsight, the objective problem should not contain pointers to the claimed solution.

96. The claimed solution is obvious when at the relevant date the skilled person, starting from a realistic starting point in the state of the art in the relevant field of technology, wishing to solve the objective problem, would (and not only "could") have arrived at the claimed solution.

97. The relevant field of technology is the field relevant to the objective problem to be solved as well as any field in which the same or similar problem arises and of which the person skilled in the art of the specific field must be expected to be aware.

98. A starting point is realistic if the teaching thereof would have been of interest to a skilled person who, at the relevant date, wishes to solve the objective problem. This may for instance be the case if the relevant piece of prior art already discloses several features similar to those relevant to the invention as claimed and/or addresses the same or a similar underlying problem as that of the claimed invention. There can be more than one realistic starting point and the claimed invention must be inventive starting from each of them.

99. The skilled person has no inventive skills and no imagination and requires a pointer or motivation that, starting from a realistic starting point, directs them to implement a next step in the direction of the claimed invention. As a general rule, a claimed solution must be considered not inventive/obvious when the skilled person would take the next step prompted by the pointer or as a matter of routine, and arrive at the claimed invention.

100. A claimed solution is obvious if the skilled person would have taken the next step in expectation of finding an envisaged solution of his technical problem. This is generally the case when results of the next step were clearly predictable, or where there was a reasonable expectation of success.

101. A reasonable expectation of success implies the ability of the skilled person to predict rationally, on the basis of scientific appraisal of the known facts before a research project was started, the successful conclusion of that project within acceptable time limits.

102. Whether there is a reasonable expectation of success depends on the circumstances of the case. The more unexplored a technical field of research, the more difficult it was to make predictions about its successful conclusion and the lower the expectation of success. Envisaged practical or technical difficulties as well as costs involved in testing whether the desired result will be obtained when taking a next step may also withhold the skilled person from taking that step. On the other hand, the stronger a pointer towards the claimed solution, the lower the threshold for a reasonable expectation of success.

*The object of the invention and underlying problem*

103. At the priority date, gear systems in the drive train of wind turbines were generally used for enabling the generator to be driven with a higher rotational speed and reduced torque compared to the lower rotational speed and higher torque of the rotor. This allows for smaller generators which is beneficial in terms of costs for e.g. transportation and materials.

104. The Claimant argues that the objective problem should be defined as finding a gearing system with high transmission/high torque in combination with minimized volume/weight.

105. The Defendant argues that the technical effect of the claimed gear system is to provide a much lower axial width of the gear system compared to gear systems in which planetary stages are used (paras. [0042]–[0044]). According to the Defendant the objective problem should be defined as to provide a gear system for increasing the rotational speed between the rotor and the generator rotor of a wind turbine, which allows to achieve a higher gear ratio per volume of control (VOC) and/or weight in the high torque domain of modern wind turbines.

106. The Court notes that according to the Patent the object of the invention is to find alternative types of gearboxes where a higher gear ratio per VOC/weight can be achieved in the high torque domain of modern wind turbine technology (para. [0004]). The inventive concept of the claimed invention is to use existing radial-moving-teeth design technology for step-up gearing which obtains compact wind turbine transmission systems (paras. [0006] and [0044]).

107. Against this background the Court finds that the skilled person would understand the underlying problem of the claimed invention as to provide a wind turbine with a gearing system which provides a higher gear ratio per volume and weight while fulfilling the requirements of the high torque conditions of modern wind turbines.

*D15 as a starting point*

108. D15 describes the drive train of a wind turbine with rotor blades (100), a rotor shaft (110) supported by bearings (120), a gear unit (130) and a generator (140) (see Fig. 1 of D15 below). The Defendant does not contest that D15 discloses features F1.1–F1.1d of claim 1 of the Patent.

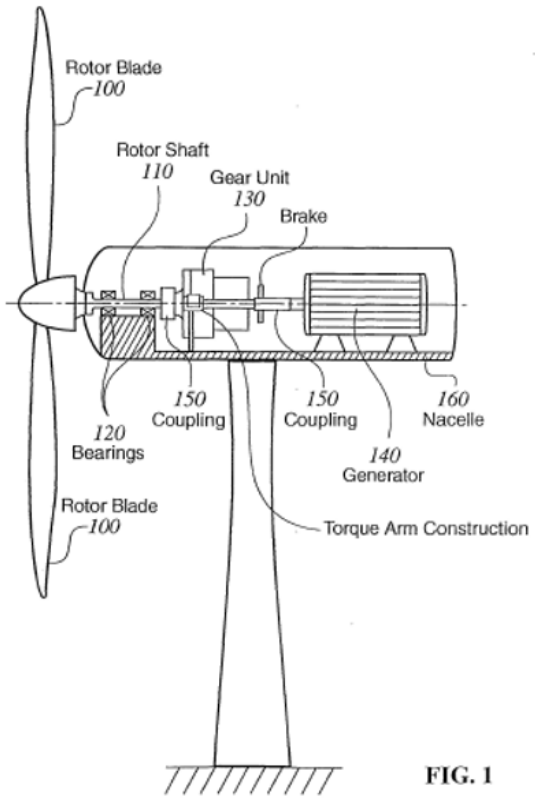


FIG. 1

109. The gear system disclosed in D15 has a ring gear (see p. 3, para. 5 and reference (4) in Fig. 2 of D15, shown below). D15 does not disclose the detailed function of the planetary gear and does at least not explicitly describe feature F1.2a. Further, the gear system of D15 has planetary stages and not the radial-moving-teeth design or the eccentric output member of the gear system of the Patent. The gear system of D15 therefore does not disclose any of the features F1.2b–F1.2d of claim 1 of the Patent.

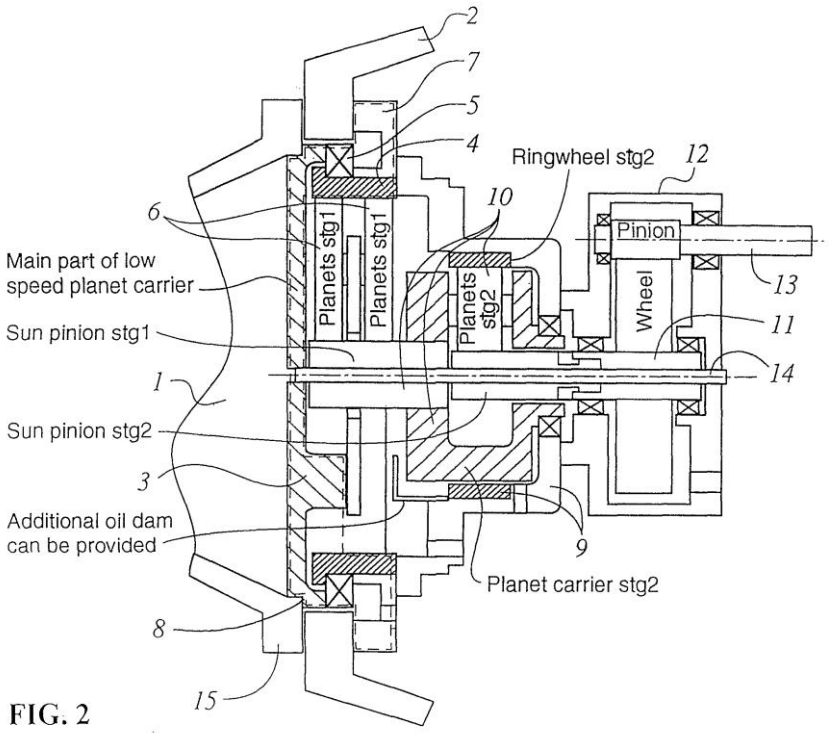


FIG. 2

110. D15 belongs to the technical field of wind turbines and specifically the design of gear units for wind turbines. Therefore, the Court considers D15 to be a suitable starting point for the assessment of inventive step.

111. D15 discusses that the drive train of wind turbines is characterised by its situation high up in the nacelle at the top of a 50 or 100 metres high tower, which makes it difficult to reach or disassemble. This problem is exacerbated by the fact that wind turbines are often situated at remote locations, sometimes even at sea, that may be hard to reach with large cranes (p. 1, para. 2). At the same time, it is important to be able to replace drive components in the nacelle in the shortest time possible due to both general cost reasons and that weather conditions may be hard to predict (p. 1, para. 3).

112. Further, wind turbine sizes have increased from rotor diameters smaller than 30 metres to rotor diameters larger than 100 metres and that the forces acting on the mechanical components of the wind turbine, for instance on the gear unit, grow more than proportional with the size and power of the turbine (p. 1, para. 5–p. 2, para.1). This evolution creates an urge to integrate drive components to reduce size and weight of the overall drive train and nacelle. Some new concepts include for instance eliminating the rotor shaft and its bearing arrangement, replacing it with a large diameter bearing arrangement that may or may not be integrated with the drive unit (p. 2, para. 2).

113. Combining the above requirements, the problem addressed by D15 is how to design an integrated drive arrangement that in the first place minimizes the need to disassemble it from the nacelle when a failure occurs by allowing service in the nacelle, and minimizes time and effort required to disassemble the gear unit from the nacelle should this be necessary (p. 2, para. 3). To solve this problem, D15 suggests an integrated gear unit design of a modular nature, wherein either the drive unit as a whole or a number of modules can be disengaged from the drive train assembly (p. 2, para. 4).

114. Against this background the Court finds that, even though D15 is considered to be a suitable starting point for the assessment of inventive step, in carrying out the inventive step assessment it should be kept in mind that D15 addresses another problem than that of the Patent, which is to provide a gearing system which provides a higher gear ratio and requires less volume and weight while fulfilling the requirements of the high torque conditions of modern wind turbines. Even if D15 also mentions the need to reduce size and weight of the overall drive train and nacelle (p. 2, ll. 7-8), it suggests solving this problem by e.g. eliminating the rotor shaft. There is nothing in D15 that encourages the skilled person to reduce the volume and weight of the gearing system, let alone by using the inventive concept of the Patent. Instead, D15 rather points the skilled person in another direction.

*D15 in combination with D14a*

115. D14a is a German patent from 1920. The invention relates to a coaxial gear system for converting high rotational speed into low rotational speed (p. 1, ll. 1–4). This is the opposite of what is required for a wind turbine where an input of high torque and low speed needs to be converted into a low torque and high speed output (para. [0004] of the Patent).

116. The Claimant has not substantiated why D15 comprises a pointer to combine its teaching with document D14a. As held above, D15 rather points the skilled person in another direction. Furthermore, as pointed out by the Defendant, all embodiments and applications of the gear system discussed in D14a relate to technical fields which are remote from wind turbines, such as a lifting device, a shearing machine, a screw lifting jack and a rail-bending clam. Already for these reasons, it cannot be concluded that claim 1 of the Patent lacks inventive step over a combination of D15 and D14a (see Court of Appeal in *Fujifilm/Kodak*, cited above, Headnote 6).

117. If, despite the above, the skilled person were to combine D15 with D14a, this still does not lead to the conclusion that the claimed subject matter lacks inventive step.

118. The Claimant argues that D14a explicitly mentions the possibility to use the gearing as step-up or step-down gearing depending on the type of the application. The Claimant refers to p. 3, ll. 64–80, which is translated to English as follows (underlining added by the Claimant).

> „As can be seen from the foregoing, the essence of the invention lies in the fact that the transmission gear is composed of three main parts: one part carrying the cam or eccentric disc, a second part carrying the plungers, and a third part comprising a gear-like annulus. <u>One of these parts must be stationary or braked or have a control mechanism, while of the other two parts, one is the driving part and the other the driven part. The manner in which these functions are distributed among the three main parts is irrelevant to the invention and, as can be seen from the examples described, depends on the intended use.</u>“

119. Figs. 1 and 2 of D14a show a gearing with two eccentricities in parallel (see below).

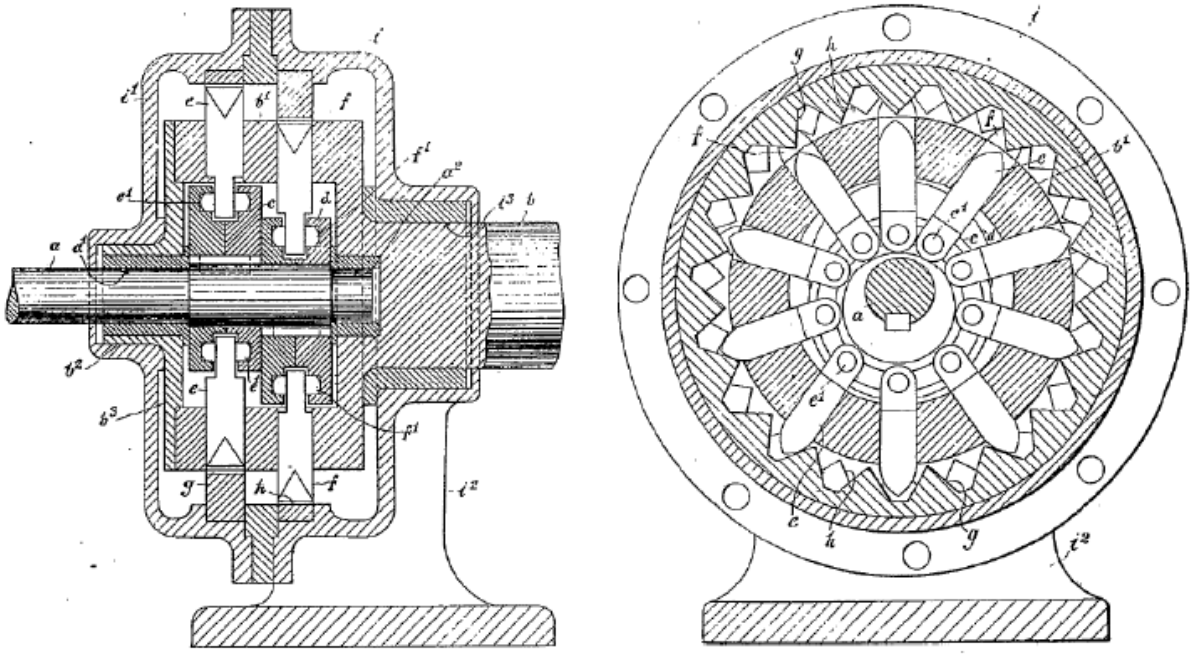

120. According to the Claimant, the skilled person thus learns from D14a that the coaxial gear systems might be used in different configurations resulting in different transmission ratios including the use as step-up gearing. To use the gear system of D14a in a wind turbine would have been possible without any substantial reconstruction or amendments.

121. However, the Court notes that the referred part of the description does not disclose any details on how to use the gear system for step-up gearing. All embodiments and applications described in D14a relate to step-down gearing (see already the first sentence of D14a, according to which "The Invention relates to a gearing to convert a high rotational speed into a low one"). Contrary to the Claimant's statements, there is no explicit mentioning anywhere in D14a of the invention being used as a step-up gearing. Neither is there any indication that the gear system could be suitable for use between the rotor and the generator of a wind turbine. Further, the skilled person would understand the above referred disclosure regarding interchangeability of the three main parts in the context of D14a as a whole, which has the object to provide a gear system for converting high rotational speed into low rotational speed.

122. In addition, the gear system of D14a does not disclose features F1.2b–F1.2d of the Patent. For example, the eccentric input members (references (c) and (d) in Fig.1) of D14a do not have a plurality of radially movable tooth segments carried in guiding slots and engageable at outer ends with the ring gear (feature F1.2b). Further, the gear system of D14a does not disclose an eccentric central output member within the input member acted on and driven by inner ends of radially movable tooth segments whereby rotary movement of the input member drives the radially movable tooth segments through engagement with the ring gear and effects rotation of the central output member (features F1.2c and F12d).

123. Even if the skilled person would, starting from D15, turn to D14a and consider reversing input and output in the gear system of D14a, the Claimant has not substantiated in sufficient detail how the skilled person would adapt the gear system for use as a step-up gearing in a modern wind turbine with high torque conditions (cf. D14a, p. 1, ll. 49–55). According to the Court, the skilled person would at least not reach the claimed subject-matter without inventive skill or hindsight.

124. To conclude, the subject-matter of claim 1 of the Patent is inventive over D15 in combination with D14a.

*D15 in combination with D20 or D11*

125. The Claimant has not duly substantiated that the skilled person, starting from D15, would be motivated to consult documents D20 and D11. Already for this reason, the inventive step attack must fail (see considerations above).

126. In addition, even if the skilled person would have turned to D20 or D11, they would not have arrived at the claimed solution. As stated above in the assessment of novelty, both D20 and D11 briefly mention that the Galaxie gear system can be used in the context of wind power. These references are, however, very brief and mentioned together with several other wholly unrelated areas. Therefore, according to the Court, D20 and D11 are not in the same technical field as D15.

127. The Claimant has pointed out that D11 lists various benefits of the Galaxie gear system, such as increased efficiency and requiring less volume (p. 20). However, even if the skilled person would have considered that the Galaxie gear system could be suitable for wind turbines in general, the skilled person would still not have arrived at the claimed solution which is to use the gear as a step-up gear for the drive train of a wind turbine. As already described in the context of novelty, wind turbines do not only have gears in the power transmission system but also for e.g. yawing and pitch control. Further, the disclosure of both D20 and D11 is on a general level and does not provide the relevant specific technical details of the Galaxie gear system required to instruct the skilled person how to modify the gear system in D15 for use as a step-up gear for the drive train of a wind turbine.

128. Accordingly, the subject-matter of claim 1 of the Patent is inventive also over D15 in combination with D20 or D11.

*GRU5 in combination with D11*

129. GRU5 is a Wikipedia article which relates to wind turbine design and describes wind turbines in general terms. GRU5 mentions the components of a wind turbine and the gearbox, but without going into the technical details (see also figure below).

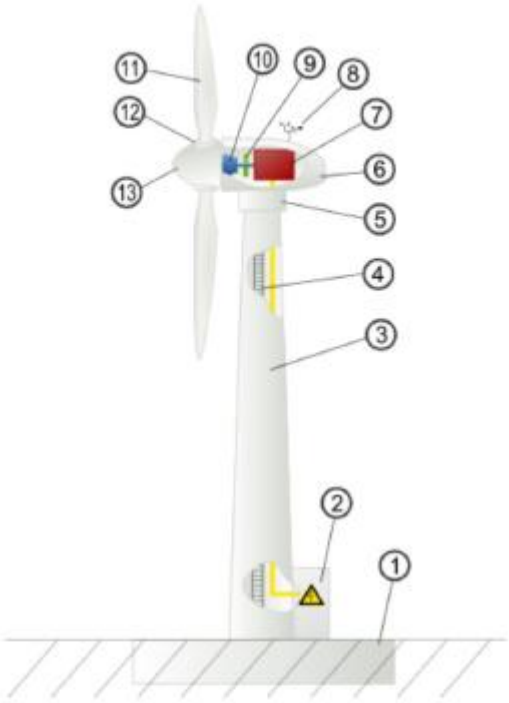


Wind turbine components : 1-Foundation, 2-Connection to the electric grid, 3-Tower, 4-Access ladder, 5-Wind orientation control (Yaw control), 6-Nacelle, 7-Generator, 8-Anemometer, 9-Electric or Mechanical Brake, 10-Gearbox, 11-Rotor blade, 12-Blade pitch control, 13-Rotor hub.

130. GRU5 discloses wind turbines in general, including wind turbines having a nacelle, a generator and a gearbox between the rotor and the generator that is arranged to increase the rotational speed between said rotor and said generator rotor. Features F1.1–F1.1d of claim 1 are thus disclosed, which is not in dispute. However, none of features F1.2a–F1.2d are disclosed.

131. According to the Court, GRU5 is a realistic starting point for the skilled person faced with the objective problem as it relates to wind turbines in general, discloses wind turbines having a gear box between the rotor and the generator and discusses step-up gear systems in the drive train of wind turbines.

132. In the opinion of the Claimant, the skilled person, confronted with the objective problem, would find the claimed solution in document D11. However, the Claimant has not explained why the skilled person, starting from GRU5, would be motivated to turn to document D11 in the first place. GRU5 does not disclose anything about the problem of finding a gearing system which provides a higher gear ratio per volume and weight. According to GRU5, a gearbox is inserted between the rotor and the hub to account for the slower rotational speed of the rotor compared to what is required for the electrical network. As both parties agree,

this was common general knowledge and does not point the skilled person in the direction of adapting the gear system, let alone in the direction of the claimed gear system of the Patent.

133. The only technical information provided in GRU5 in relation to alternative gear boxes is that the use of magnetic gearboxes has been explored as a way of reducing wind turbine maintenance costs or to attach the rotor shaft directly to the generator, thereby dispensing with the gearbox completely. According to GRU5 gearless wind turbines are said to have advantages such as increased efficiency and reduced maintenance costs. This information would not have motivated the skilled person to consider the Galaxie gearing system as disclosed in D11. To the contrary, both these suggestions would rather lead the skilled person away from a solution that combines GRU5 with D11. Already for this reason, the inventive step attack based on GRU5 in combination with D11 cannot succeed.

134. The fact that Mr. [redacted] as head of R&D of his previous employer (in the marine industry) was pointed to Galaxie by his CEO who asked him to have a look at this novel concept presented by Wittenstein because, across all industries, it was considered potentially ground-breaking (GRU8, p. 2, para. 6), as pointed out by the Claimant during the oral hearing, does not change the Court's assessment. From this information, it does not follow that the skilled person would be motivated to, starting from GRU5, consult D11. In addition, Mr. [redacted] also states that it became apparent to him that the Galaxie gear was used to reduce a higher speed of an electric motor to the lower speed of a unit to be driven. This is the opposite of what a gear in the power transmission system of a wind turbine is supposed to do.

135. Furthermore, even if the skilled person were, starting from GRU5, to consult D11, the reasoning above starting from D15 applies *mutatis mutandis*. D11 does not provide the skilled person, faced with the objective problem, with any technical information on where to use the Galaxie gear in wind turbines, let alone on how the Galaxie gear would have to be implemented as a step-up gear for the drive train of a wind turbine.

136. This means that following the reasoning above for using D15 as a starting point, the skilled person would not reach the claimed subject-matter of claim 1 of the Patent starting from GRU5 and combining it with D11. Accordingly, the subject-matter of claim 1 of the Patent is therefore inventive also over GRU5 in combination with D11.

*GRU5 in combination with D14a or D20*

137. Just as for the assessment of inventive step over GRU5 in combination with D11, the technical information in GRU5 about magnetic gear boxes or attaching the rotor shaft directly to the generator and dispensing with the gearbox completely, leads the skilled person away from a solution which combines GRU5 with a gear system of either D14a or D20. Already for this reason, the inventive step attack based on GRU5 in combination with D14a and D20 cannot succeed.

138. Even if the skilled person were, starting from GRU5, to consult D14a or D20, the reasoning above starting from D15 applies *mutatis mutandis*. Neither D14a nor D20 provides the skilled person, faced with the objective problem, with the required technical information on how to modify the respective gear systems of these documents for use as a step-up gear for the drive train of a wind turbine.

139. The subject-matter of claim 1 of the Patent is therefore inventive also over GRU5 in combination with D14a or D20.

*D20 and D11 as starting points*

140. The Court has already held that neither D20 nor D11 belong to the technical field of (gear boxes for) wind turbines. They would therefore not be of interest to the skilled person who wants to solve the underlying problem of the Patent. As discussed above both D20 and D11 are generic presentations of the Galaxie gear system which provide very limited technical information to the skilled person. Neither of the documents have many features in common with claim 1 of the Patent. According to the Court, both D20 and D11 are therefore not suitable starting points for the development of a wind turbine with the features of claim 1 of the Patent. Already for this reason the attacks using these documents as starting points do not take away the inventiveness of claim 1 of the Patent.

*D20 or D11 in combination with D14a*

141. Even if D20 or D11 were to be accepted as realistic starting points, the Claimant has not explained why the skilled person would, starting from D20 or D11, consult D14a. This is also not apparent to the Court. Also for this reason, the inventive step attack fails.

142. Finally, even if the skilled person were to, starting from D20 or D11, consult D14a, it would at least not lead them to a wind turbine with a main shaft configured to be driven by the rotor about a main axis and supported on the nacelle (feature F1.1c of claim 1 of the Patent). Further, neither D20 or D11 nor D14a disclose a gear system for increasing rotational speed between the rotor and the generator rotor of a wind turbine (feature F1.1d).

143. As explained above, the gear system of D14a does not disclose features F1.2b–F1.2d of the Patent and even if the skilled person would consider reversing input and output in the gear system of D14a, the Claimant has not substantiated in sufficient detail how the skilled person would adapt the gear system for step-up gearing in a modern wind turbine with high torque conditions. Claim 1 of the Patent is therefore inventive over D20 or D11 in combination with D14a.

*D20 or D11 in combination with common general knowledge/GRU5*

144. Similar considerations apply to the inventive step attack starting from D20 or D11 in combination with common general knowledge (GRU5). Even if the skilled person would,

regardless of the lacking pointer, combine D20 or D11 with GRU5, this combination would at least not lead them to a wind turbine with features F1.2c and F1.2d of the Patent. Neither of these documents disclose a gear system where a central output member is driven by radially movable tooth segments to increase rotational speed and there are no pointers to such a configuration. The skilled person would at least not reach the claimed subject-matter without hindsight. Claim 1 of the Patent is therefore inventive over D20 or D11 and common general knowledge/GRU5.

**VI. Entitlement**

145. According to Art. 138(1)(e) EPC a European Patent may be revoked on the ground that the proprietor of the patent is not entitled under Art. 60(1) EPC. It follows from the latter article that the right to a European patent shall belong to the inventor or his successor in title. If the inventor is an employee, the right shall be determined in accordance with the national law of the state of employment.

146. The Claimant argues that the Defendant is not entitled to the Patent, since the Defendant is neither the inventor nor the inventor's successor in title. According to the Claimant, it is itself entitled to the Patent as the successor in title to the actual inventor [redacted] who was an employee of the Claimant when the invention was made. In any event the Claimant has rights to parts of the Patent since Mr. [redacted] was at least a co-inventor who made a significant contribution to the invention, together with other employees of the Claimant or affiliated companies. The Defendant's alleged inventor [redacted] thus at least did not conceive the final and complete invention by himself. If the Court finds that the Defendant is not entitled to the whole Patent this deficiency is sufficient for it to be revoked in its entirety.

147. The Claimant has described how the parties met and cooperated between [redacted] According to the Claimant, it was its employee Mr. [redacted] who disclosed the subject-matter of the Patent to representatives from the Defendant, including Mr. [redacted] during this cooperation. No employees of the Defendant that took part in the cooperation qualifies as an inventor of the technical teaching claimed by the Patent, and the Defendant is not a successor in title of the rights to it. The Claimant has submitted inter alia minutes and presentations from meetings and a witness statement by Mr. [redacted] to support these arguments.

148. The Defendant argues that the Claimant cannot invoke Art. 138(1)(e) EPC since it has failed to demonstrate that it has itself the rights to the Patent. If a third party was allowed to raise this invalidity ground this could prevent a subsequent vindication action of the actual proprietor. For a patent to be revoked on the ground that the proprietor is not entitled it is further necessary to demonstrate that the proprietor has no rights at all to the patent. In this case the Claimant has neither demonstrated that Mr. [redacted] was the inventor, or even a co-inventor, nor that the Claimant is the successor in title.

149. The Defendant maintains that the registered inventor Mr. [redacted] also is the inventor of the Patent and that the Defendant has the rights to the Patent as his successor in title. Mr. [redacted] developed the concrete application of the Galaxie gearbox in wind turbines and Mr. [redacted] and the Claimant only had an advisory role in the actual implementation process. Mr. [redacted] was the person accountable for identifying and overcoming the existing deficiencies within the course of the parties' cooperation. The Defendant has submitted e-mails between the parties and a witness statement by Mr. [redacted] to support these arguments.

150. The Court notes that the present case is a revocation action wherein the entitlement to a patent is invoked as a revocation ground (Art. 138(1)(e) EPC). This dispute is not about deciding who ultimately has the better right to a patent. The parties have informed the Court that there are and have been no parallel national proceedings regarding who has the better right to the Patent.

151. Under Art. 47(6) UPCA any natural or legal person who is concerned by a patent, may bring actions in accordance with the Rules of Procedure. According to Art. 65(2) UPCA, the Court may revoke a patent, either entirely or partly, only on the grounds referred to in Art. 138(1) and 139(2) EPC. There are differing views in the legal literature regarding whether in UPC revocation actions, the ground for revocation of Art 138(1)(e) EPC may only be invoked by the inventor or its successor in title, whose interests are directly affected or whether also "unrelated" third parties are allowed to invoke this ground, since it would be in the public interest to eliminate an unjustified monopoly.

152. According to national provisions in several UPC Member States (e.g. Germany, The Netherlands and Sweden) only the alleged inventor or its successor in title may invoke lack of entitlement as a ground for revocation. In the view of this Court, there is a case to be made in support of the revocation ground of Art 138(1)(e) EPC being a relative ground, i.e. a ground that may be invoked by a materially harmed third party and not by any third party. This view is supported by the preparatory documents of the EPC, where this ground for revocation was later added accepting a proposal by the United Kingdom delegation (BR/GT I/133/71) for the reason that the victim of misappropriation could not under the prior text obtain a declaration revoking the patent with effect *ex tunc*.

153. However, in the present case it is not necessary for the Court to conclusively determine this issue since in the Statement for revocation, the Claimant indicated, by reference to facts and evidence and in a not *prima facie* implausible way, that it considers itself the successor in title to the inventor, or at least a co-inventor, of the Patent. For the Claimant to be allowed to invoke Art. 138(1)(e) EPC as a ground for revocation, the relevant question is not whether the Claimant *is* entitled to the Patent. This question may be the subject of an entitlement action. Instead, it is sufficient that upon a cursory review, the Claimant's case for entitlement is not prima facie implausible which threshold is met in the present case. The Claimant is therefore allowed to invoke lack of entitlement as a ground for revocation.

154. According to the Court the requirement in Art. 138(1)(e) EPC that the proprietor is not entitled should be interpreted as meaning that the proprietor does not have any rights to the patent. This follows from the wording of the provision of Art. 138(1)(e) EPC itself, which is part of an exhaustive list of revocation grounds ("may be revoked…only") and specifies that the proprietor is *not* entitled. In the view of the Court it would also not be a reasonable interpretation that a co-inventor, or his/her successor in title, could in principle always have a patent fully revoked because he or she contributed to some part of the claimed subject-matter. Against this background the Court finds that it is not sufficient for this ground of revocation to be successful that a claimant demonstrates that it has rights to parts of a patent, e.g. because one of its employees has contributed as a co-inventor.

155. It follows from Rule 8.5(c) RoP that there is a rebuttable presumption that the person shown in the European Patent Register kept by the European Patent Office is the person entitled to be registered as proprietor (see also e.g. LD Hamburg, UPC_CFI_54/2023, decision of 26 August 2024, *Avago v Tesla*, paras. 16–17).

156. As held above, in a revocation action, the burden of presentation and proof for facts establishing the lack of validity normally lies with the claimant. The same principle applies when a claimant invokes the ground that the proprietor of the patent is not entitled.

157. In the present case both parties have described their cooperation and referred to meetings and correspondence between them. They agree that the gearbox of the Patent was based on the radial-moving-teeth design of the Claimant's Galaxie gearbox, but disagree on who took the initiative to the cooperation and who developed the inventive concept to use the Galaxie gear as a step-up gear in the power train of wind turbines and how to implement that. The parties' respective views are supported by the witness statements of the alleged inventor Mr. [redacted] (Exhibits WS2 and WS3) and the registered inventor Mr. [redacted] (Exhibit GRU8) respectively.

158. The Court finds that the facts and evidence put forward by the Claimant do not give sufficiently credible support to substantiate that Mr. [redacted] is the *sole* inventor of the claimed subject-matter and that the Defendant is therefore not entitled (at all). The Court particularly observes that the Claimant and Mr. [redacted] have failed to submit sufficiently detailed information about Mr. [redacted] actual contributions to the invention. Instead, both the Claimant's written submissions and Mr. [redacted] witness statements as regards the development of the invention are rather vague with general references to various features of the Patent. Against this background, there is at least no reason to value Mr. [redacted] witness statements as more credible and reliable than Mr. [redacted] more detailed account of the cooperation in his witness statement, according to which he [redacted]

159. Further, the other written evidence submitted by the parties at least does not support that the Defendant is not (in part) entitled to the Patent. The Claimant's own minutes from the

parties' initial meeting [redacted]

160. The Claimant has also referred to, inter alia, an e-mail from Mr. [redacted] to Mr. [redacted] summarizing the key points of a meeting between the parties [redacted] However, even if the parties discussed [redacted] the content at least does not support that Mr. [redacted] was the sole inventor. As regards the Claimant's assertion that Mr. [redacted] the Court observes that this was long before the Galaxie gearbox entered the market and not even allegedly related to using the gearbox as a step-up mechanism in the power transmission system of wind turbines.

161. The Court further notes that in [redacted] representatives from the parties exchanged several e-mails [redacted] without the Claimant's employees raising any objections or even asking questions as to entitlement to the Patent. For example, [redacted] Even if the alleged inventor Mr. [redacted] was not directly involved in these e-mail exchanges, they are difficult to reconcile with the assertion that the Defendant has not at all contributed to the invention of the Patent.

162. Against this background, the evidence submitted by the parties does not support that Mr. [redacted] was the sole inventor of the claimed subject-matter, but rather points to Mr. [redacted] being at least a co-inventor. It is therefore not established that the Defendant does not have any rights to the Patent. The Claimant has thus not proven that the Defendant is not entitled to the Patent, and this ground for revocation should be dismissed.

**VII. Sufficiency of disclosure**

*The Patent as granted*

163. The Claimant argues that dependent claims 21 and 22 are not sufficiently disclosed to be carried out by the skilled person. Both claim 21 and 22 depend directly or indirectly on claim 19. Claim 19 limits the claimed subject-matter to the gearbox housing being suspended from the bearing housing. According to the description of the Patent the ring gear is fixed to or formed as part of the gearbox housing (para. [0047]). Claim 19 thus implicitly claims that the ring gear is suspended from the bearing housing. On the other hand, claim 21 stipulates that the ring gear is integrated with or rigidly coupled to the bearing housing. Claim 22 claims that the gear system as a whole is fully integrated within the bearing housing which is also not possible in combination with claim 19. Hence, claims 21 and 22 are in contradiction to claim 19 and cannot be carried out by the skilled person.

164. The Defendant contests that claims 21 and 22 are not sufficiently disclosed. An embodiment having the features of claims 21 and 22 is illustrated in Fig. 8 of the Patent and disclosed in paras. [0072]–[0075] of the description (see Fig. 8 below).

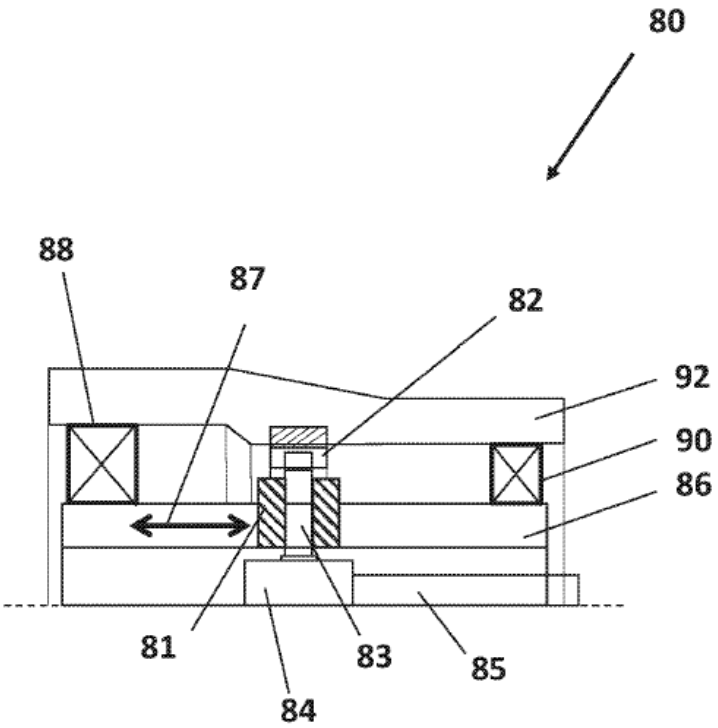


165. According to the Defendant it is shown in Fig. 8 that the ring gear (82) is integrated with or rigidly coupled to the bearing housing (92) and the input member (81) is integrated or rigidly coupled to the main shaft (86) as defined in claim 21. Additionally, the gear system is fully integrated within the bearing housing (92) such that the ring gear (82), along the rotational axis of the main shaft (86) is positioned between the first bearing and the second bearing (90), as defined in claim 22. Fig. 8 and paras. [0072]–[0075] do not explicitly mention a gearbox housing suspended from the bearing housing (92), but the skilled person would have no difficulty to additionally provide a gearbox housing suspended from the bearing housing in the embodiment of Fig. 8. Finally, the Defendant argues that the Claimant has no legal interest in the validity of the dependent claims 21 and 22 since they do not extend the scope of protection of claim 1.

166. The Court initially observes that the Court of Appeal has held that if a counterclaim for revocation is already unsuccessful with the respect to an independent claim, no decision is required regarding the dependent claims for lack of legal interest (UPC_CoA_302/2025 a.o., decision of 17 February 2026, *Rematec/Europe Forestry*, para. 91; see also UPC_CFI_471/2023 LD Mannheim, decision of 6 June 2025, *DISH/AYLO*, para. 150).

167. However, even if the independent patent claim to which a dependent patent claim directly or indirectly refers back generally has a scope of protection that also encompasses the dependent patent claim, dependent claims are part of the patent. Further, the Court of

Appeal has clarified that dependent claims may be used as fall-back positions in revocation actions (UPC_CoA_473/2025 a.o., decision of 13 July 2026, *Fujifilm/Kodak*, para. 53 et seqq.). Against this background the Court finds that, at least in a stand-alone revocation action where no infringement claim has been brought and it is therefore not yet clear which claims a patent holder may decide to rely on for what purpose in the future, a claimant may have a legitimate interest in having the validity of dependent claims assessed, even if the independent claim is deemed valid. Although the Court is not generally required to take a decision regarding dependent claims in such a situation, it should at least have the discretion to do so if considered appropriate based on the circumstances of the case. In the present case, given the debate between the parties, the Court considers it indeed appropriate to assess the validity of claims 21 and 22.

168. Both claims 21 and 22 directly refer back to claim 19, according to which the gearbox housing is suspended from the bearing housing. The skilled person, reading the whole of the Patent with a mind willing to understand, would construe "suspended from" as the gearbox housing and the bearing housing being separate parts. It follows from the description that the ring gear is either fixed to or formed as part of the gearbox housing (para. [0047]). Claim 19 thus limits the claimed subject-matter to the gearbox housing being suspended from the bearing housing.

169. Claims 21 and 22 on the other hand stipulate that the ring gear is integrated with or rigidly coupled to the bearing housing (claim 21) or that the gear system is fully integrated with the bearing housing (claim 22). Both claims 21 and 22 are therefore in contradiction to claim 19.

170. In relation to the Defendant's argument that the skilled person would not have any difficulty to additionally provide a gearbox housing suspended from the bearing housing in Fig. 8, the Court observes that the Defendant has not substantiated how the skilled person would construe such a solution. Further, the reference signs in claims 21 and 22 do not refer at all to Fig. 8 but in part to Fig. 3, which illustrates a prior art transmission system. Even if reference signs shall not be construed as limiting the extent of the matter protected by the claims, these circumstances make it even more difficult for the skilled person to fully understand the relationship between claims 21 and 22 and claim 19.

171. Against this background the Court finds that claims 21 and 22 do not disclose the invention in a manner sufficiently clear and complete for it to be carried out by a person skilled in the art. These claims are therefore invalid and the Patent cannot be maintained as granted (Art. 65(3) UPCA).

*Auxiliary request 1*

172. According to the Defendant's auxiliary request 1, claims 21 and 22 are deleted, which means that it overcomes the deficiencies of these claims. Auxiliary request 1 is otherwise identical to the Patent as granted and consequently the Court's assessment regarding novelty and inventive step is the same as above. Auxiliary request 1 also complies with Art. 84 and 123(2) and (3) EPC. This has not been challenged by the Claimant.

173. The Patent should therefore be maintained in amended form according to auxiliary request 1, see Annex 1 to this decision (Exhibit GRU12).

**VIII. Conclusion and costs**

174. The grounds, facts and evidence submitted by the Claimant neither take away the novelty nor the inventiveness of the Patent. The Claimant has not demonstrated that the Defendant is not entitled to the Patent. The dependent claims 21 and 22 of the Patent do not disclose the invention in a manner sufficiently clear and complete for it to be carried out by a person skilled in the art and should be revoked (Art. 65(3) UPCA). The Patent can be maintained as amended by the Defendant's auxiliary request 1 where these claims are deleted.

175. The conclusions reached on novelty, inventive step and sufficiency of disclosure are in alignment with the outcome of the EPO opposition proceedings.

176. The Court finds that the Defendant, as the predominantly successful party, is entitled to recover 90% of its legal costs, whereas the Claimant is entitled to recover 10% of its legal costs (Art. 69(2) UPCA and Rule 118.5 RoP).

177. The value of the case was already set by the judge-rapporteur at EUR 500.000 (order dated 20 March 2026). Based on the table of maximum amounts for recoverable costs (published by the Administrative Committee on 24 April 2023), the ceiling is EUR 56.000. The parties have agreed to not dispute each other's representation costs up to that ceiling.

DECISION

I. The following arguments submitted by Wittenstein SE in the Rejoinder to the Reply to the Defence to the Application to amend the patent of 12 January 2026 are disregarded as late-filed:

(i) The arguments under section "A. Preliminary Remarks", p. 4–5.
(ii) The arguments under section "B I. Auxiliary Request 1", p. 5–14, including the new attack D11 in combination with D15.
(iii) The arguments under section "B II. Auxiliary Request 2", p. 19–20.
(iv) The arguments under section "B VII. D20: Disclosed with Figure / At Least Test is Undisputed", p. 27–28.
(v) The arguments under section "C. No Entitlement", p. 28–33.

Vestas Wind Systems A/S's further requests to disregard late-filed attacks and arguments are dismissed.

II. The European patent with unitary effect EP 4 226 039 is revoked in part in respect of claims 21 and 22, but maintained as amended by auxiliary request 1 (see Annex 1).

III. Wittenstein SE is ordered to bear 90% of Vestas Wind Systems A/S's legal costs.

IV. Vestas Wind Systems A/S is ordered to bear 10% of Wittenstein SE's legal costs.

| | |
|---|---|
| András Kupecz<br>Presiding judge and judge-rapporteur | András Ferenc Kupecz<br>Digital unterschrieben von András Ferenc Kupecz<br>Datum: 2026.08.27 11:08:31 +02'00' |
| Daniel Severinsson<br>Legally qualified judge | Sven Daniel Severinsson<br>Digitally signed by Sven Daniel Severinsson<br>Date: 2026.08.27 08:20:48 +02'00' |
| Kerstin Roselinger<br>Technically qualified judge | Digitally signed<br>Roselinger Kerstin<br>2026-08-27 10:36:25 +0200<br>Unified Patent Court<br>Einheitliches Patentgericht<br>Juridiction unifiée du brevet |
| For the deputy-registrar | Gnaß Natalie<br>Digital unterschrieben von Gnaß Natalie<br>Datum: 2026.09.02 10:19:11 +02'00' |

This decision was read out in open court on 2 September 2026.

Information about appeal

An appeal against the present decision may be lodged at the Court of Appeal, by any party which has been unsuccessful, in whole or in part, in its submissions, within two months of service of the decision (Art. 73(1) UPCA, Rules 220.1(a) and 224.1(a) RoP).

Information about enforcement

Art. 82 UPCA, Art. 37(2) UPCS, Rules 118.8, 158.2, 354 and 355.4 RoP:

An authentic copy of the enforceable decision will be issued by the Deputy-Registrar upon request of the enforcing party (Rule 69 of the Rules governing the Registry of the UPC).

**EP Patent No.:** **EP 4 226 039 B1**
**EP Application No.:** **21754915.3**
**Proprietor:** **VESTAS WIND SYSTEMS A/S**
**Our Ref.:** **NIUB40112-SOSMAM**
**Date:** **September 12, 2025**

**Enclosure GRU12**
Wittenstein SE ./. Vestas Wind Systems
ACT_28128/2025
File number App_36771/2025
GRÜNECKER
Patent- und Rechtsanwälte PartG mbB

**CLAIMS – AUXILIARY REQUEST 1**

1. A wind turbine (2), comprising:

a nacelle (8) provided on the top of a tower (12);

a rotor including a hub (6) and a number of blades (4),

a main shaft (16) configured to be driven by the rotor about a main axis and supported on the nacelle (8),

a generator (28) having a generator rotor and generator stator, and

a gear system (25) arranged to increase the rotational speed between said rotor and said generator rotor;

**characterized in that** the gear system (25) comprises:

a fixed ring gear (50),

an input member (53) coupled to or driven by the main shaft (16) having a plurality of radially movable tooth segments (52, 63) carried in guiding slots and engageable at outer ends with the ring gear (50),

a central output member (55) within the input member (53) having an outer eccentric profile acted on and driven by inner ends of radially movable tooth segments (52, 63),

whereby rotary movement of the input member (53) drives the radially movable tooth segments (52, 63) through engagement with the ring gear (50) and effects rotation of the central output member (55).

2. A wind turbine according to claim 1, wherein said input member is an annular input member.

3. A wind turbine according to claim 1 or 2, wherein each radially movable tooth segment (52, 63) is connected to a tilting pad (54) through a flexible connection, preferably a cylindrical-joint-like connection; said tilting pad (54) being adapted for sliding along said output member (55).

4. A wind turbine according to any of claims 1 to 3, wherein the output member (55) is generally circular in cross-section with at least one eccentricity, preferably at least two eccentricities.

5. A wind turbine according to any of claims 1 to 4, wherein said output member (55) is coupled to at least one further gear stage, such as one parallel gear stage.

6. A wind turbine according to any of claims 1 to 5, wherein the gear system exhibits backlash between the non-loaded flank and the rear flank of the ring gear.

7. A wind turbine according to any of claims 1 to 6, wherein said gear system (25) has a speed-increasing transmission ratio between i=10 and i=150, preferably between i=20 and i=75.

8. A wind turbine according to any of claims 1 to 7, wherein said gear system (25) has a number of radially movable tooth segments (52, 63) between 10 and 200, preferably between 40 and 100.

9. A wind turbine according to any of claims 1 to 8, wherein said gear system (25) has at least two rows of radially movable tooth segments.

10. A wind turbine according to any of claims 1 to 9, wherein said gear system (25) has at least one row of radially movable tooth segments, and wherein the number of radially movable tooth segments per row is between 12 and 60.

11. A wind turbine according to any of claims 1 to 10, wherein the diameter of said ring gear is between 1000mm and 3500 mm, preferably between 1500mm and 2500mm.

12. A wind turbine according to any of claims 1 to 11, wherein said movable tooth segments (52, 63) are cylindrical with a diameter of between 10 and 20 cm, and with a length between 20 and 50 cm.

13. A wind turbine according to any of claims 1 to 12, wherein an outer tooth flank contour (61, 62) of a tooth flank of the tooth segments and/or a flank contour (64, 65) of a toothing (13) of an internal toothing (72) of said ring gear (50) have/has, in relation to a gear set axis (M), a tooth contour which makes surface contact possible in an engagement region, wherein the surface contact is achieved by the design as a logarithmic spiral.

14. A wind turbine according to any of claims 1 to 13, wherein, regardless of a selected radius of the gear set axis (M), the outer tooth flank contour (61, 62) of the flank region of the tooth segment (52, 63) and the flank contour of the internal toothing system of the toothing system of the ring gear correspond to a common logarithmic spiral (Ln) with a pitch angle (α).

15. A wind turbine according to any of claims 1 to 14, wherein the pitch angle (α) is between 15° and 75°, such as between 20° and 40°.

16. A wind turbine according to any of claims 1 to 15, wherein a coating is used in at least one of the following interfaces: tooth segment (52, 63) to ring gear (50), tooth segment (52, 63) to input member (53), and tilting pad (54) to output member (55).

17. A wind turbine according to any of claims 1 to 16, wherein said wind turbine (2) has a nominal power of at least 2MW, such as at least 4MW.

18. A wind turbine according to any of claims 1 to 17, further comprising:

a support structure including at least one bearing (18, 20) supporting the main shaft (16) for rotation about the main axis and constraining other movements;

wherein said gear system has a gearbox housing rigidly coupled to the support structure.

19. A wind turbine according to claim 18, wherein the support structure further includes a bearing housing (22) surrounding the at least one bearing (18, 20), the gearbox housing being suspended from said bearing housing (22).

20. A wind turbine according to claim 19, wherein the at least one bearing comprises a first bearing (18) and a second bearing (20) spaced apart within the bearing housing (22).