Unified Patent Court
Einheitliches Patentgericht
Juridiction unifiée du brevet

Case number: UPC_CFI_860/2025

Decision

of the Court of First Instance of the Unified Patent Court, Central Chamber (Milan Division)
made on 19 August 2026
concerning EP 2223589

HEADNOTES:

1. The subject-matter of the action for revocation before the Unified Patent Court is determined not only by the grounds for revocation put forward within the meaning of Article 138(1) EPC, but also by the citations and arguments put forward in support of revocation.

2. The 'interest' required by Article 47(6) of the Unified Patent Act for invalidity proceedings must be interpreted broadly. A distinction must be made between private and commercial conduct, as Article 27(a) of the Unified Patent Act demonstrates. Since legal persons cannot act 'privately', their conduct must always be classified as commercial. In principle, legal persons always have a stake within the meaning of Article 47(6) of the EPGÜ. They have a fundamental interest in ensuring that patents which should not have been granted on the grounds of invalidity are not upheld. This applies regardless of whether they are already active in the relevant sector.

HEADNOTES:

1. The subject-matter of an action for revocation before the Unified Patent Court is determined not only by the grounds for revocation invoked within the meaning of Article 138(1) EPC, but also by the prior-art documents and arguments relied upon in support of the revocation.

2. The concept of being 'concerned' by a patent, as set out in Article 47(6) of the UPCA for revocation proceedings, is to be interpreted broadly. A distinction must be drawn between private and commercial acts, as Article 27(a) of the UPCA makes clear. Since legal persons cannot act 'privately', their acts must always be classified as commercial. As a general rule, legal persons are always to be regarded as being 'concerned' within the meaning of Article 47(6) of the UPCA. They have, as a matter of principle, an interest in ensuring that patents which should not have been granted because a ground for revocation exists are not maintained. This applies irrespective of whether they are already active in a relevant

industry.

KEYWORDS:
Interest, other pending litigation, front company, patent interpretation, prior publication, prior use, late submission

CLAIMANT:
LS9 GmbH, Garmischer Str. 9, 81373 Munich,
represented by Matthias Geitz, solicitor

DEFENDANT:
Bellissa HAAS GmbH, Birkenstr. 22, 88285 Bodnegg-Rotheidlen
represented by Thomas Adrian, solicitor, and Thomas Daub, patent attorney and European patent attorney

PATENT IN DISPUTE
European Patent No. 2223589

ADJUDICATING PANEL

Presiding Judge	Andrea Postiglione
Rapporteur	Anna-Lena Klein
Technically Qualified Judge	Max Tilmann

PARTICIPATING JUDGES
This decision was made by the Chamber.

LANGUAGE OF THE PROCEEDINGS
German

SUBJECT
Action for annulment, in this case: final decision

ORAL HEARING
9 July 2026

BRIEF SUMMARY OF THE FACTS

1 The claimant has brought an action for revocation against the defendant, filed on 11 September 2025.

2 The defendant is the sole proprietor of European patent 2 223 589 B1 relating to a flowerbed edging with a lockable metal strip (‘the patent in suit’). The

Application was filed on 11 February 2010 and published on 1 September 2010. The application claims priority from 25 February 2009 with reference to DE 102009010505. The notice of grant was published in the Patent Gazette on 30 October 2013.

3 The patent in suit is in force in the Federal Republic of Germany, Austria and Luxembourg.

4 Claim 1 reads as follows in the granted version:

> Edging for flowerbeds and grassed areas, comprising at least two sheet metal strips which can be connected to one another at their ends, which are crimped at least along their upper longitudinal edge and form connecting ends (2, 3) which are inserted into one another in a mutually overlapping manner, wherein one connecting end is formed as a tongue (4) which engages in a receiving slot (16) arranged in the opposite connecting end**, characterised in that** a receiving slot (16), situated in the flanging of one connecting end (3), can be fitted onto the tongue (4) at the other connecting end.

5 The patent in suit is the subject of separate infringement proceedings and a counterclaim for a declaration of invalidity. By a decision dated 12 September 2025, the Mannheim Local Chamber, to which the case was referred, dismissed the counterclaim for nullity (file reference UPC_CFI_338/2024 (Mannheim Local Chamber), decision of 12 September 2025 – Bellissa Haas – Windhager GmbH). The defendant in that case and the counter-claimant for annulment lodged an appeal against the decision. The appeal proceedings are pending before the Court of Appeal under case number CoA_894/2025. These proceedings are hereinafter referred to as the 'parallel proceedings'.

6 The claimant is a limited liability company (GmbH) registered in the German Commercial Register. According to the extract from the Commercial Register dated 11 May 2026, its corporate purpose is the offering, organisation and conduct of seminars and the production of publications. The claimant's current representative was the managing director of the claimant. He resigned from his position as managing director before notifying the court, by written submission dated 13 May 2026, that he would represent the claimant, which had previously been represented by others. The resignation is entered in the Commercial Register (see extract from the Commercial Register dated 11 May 2026, attached to the written submission of 13 May 2026). According to the list of shareholders, the claimant's representative holds a 40 per cent stake in the claimant (see list of shareholders, submitted via CMS with the written submission of 10 July 2026; see further below, para. 15).

7 In addition to the claimant's representative, Mr[redacted] was and remains a director and shareholder of the claimant. The claimant's representative and Mr[redacted] are also managing partners of the law firms 'LS-MP Loth & Spuhler Munich Patent von Puttkamer Berngruber Loth Spuhler Partnerschaft von Patent- und Rechtsanwälten mbB' and 'LS-IP Loth & Spuhler Intellectual Property Law Partnerschaft von Rechtsanwälten mbB'.

Both law firms and the claimant have the same registered office in Munich and can be contacted on the same telephone number (Statement of Defence, p. 4 et seq.).

8 Prior to the court proceedings, the claimant's representative sent the defendant a letter dated 18 August 2025, reference DP4. An extract from this letter reads as follows:

'(…)

Windhager Handelsgesellschaft mbH, LS 9 GmbH v bellissa HAAS GmbH

(…)

In the above matter, we hereby confirm, with the assurance of our solicitors that we are duly authorised, that we also represent Windhager Handelsgesellschaft m.b.H., (…), in this regard.

We also confirm that we represent the company LS 9 GmbH, (…).

1. With regard to the parallel legal proceedings before the Unified Patent Court, (…), we have carried out further research.

In the course of this research, we have identified US Patent No. 2,821,809 'Metal Edging', which was published as early as 4 February 1958.

This patent relates to (…).

2. In particular, Figure 5, shown below, fully anticipates the subject-matter of European Patent No. EP 2 223 589 B1 'Flowerbed edging with a lockable metal strip': (…)

3. The subject-matter of European Patent No. EP 2 223 589 B1 'Flowerbed edging with a lockable sheet metal strip' is thus fully anticipated by US Patent No. 2,821,809 'Metal Edging' as at the priority date and is therefore not novel. Due to lack of novelty, European Patent No. EP 2 223 589 B1 'Flowerbed edging with a lockable metal strip' is null and void in its entirety.

Against this background, we hereby set your client a one-off, non-extendable deadline until

Wednesday, 20 August 2025, 5.00 pm,

to contact Mr[redacted] directly and to bring about a swift resolution of all parallel legal proceedings before the Unified Patent Court. We would like to point out at this stage that such a resolution must include the withdrawal of the infringement claim and full reimbursement of the costs incurred by our client.

Should your client allow this deadline to pass without taking action, or should a prompt resolution of all parallel proceedings before the Unified Patent Court not be reached, we shall, on behalf of our client, LS 9 GmbH, without further

further notice, bring an action for revocation against European Patent No. EP 2 223 589 B1 'Flowerbed edging with a lockable metal strip'.

4. Furthermore (…)"

CLAIMS OF THE PARTIES

9 The claimant requests:

That European Patent No. EP 2 223 589 B1 be declared invalid in respect of the Contracting States of Germany, Austria and Luxembourg.

10 The defendant, who has (in the alternative) filed a request for amendment of the patent, requests that

1. that the contested patent be maintained in the form in which it was granted and that the action for revocation be dismissed (primary claim),
2. in the alternative, that the patent in dispute be upheld in accordance with one of the alternative claims 1 to 31.

11 With regard to the request for amendment, the claimant requests that European Patent No. 2 223 589 B1 also be declared invalid to the extent of auxiliary claims 1 to 31, in each case in respect of the Contracting States of Germany, Austria and Luxembourg.

12 The parties have waived a formal pronouncement of the decision in open court.

FACTUAL AND LEGAL ISSUES

CAPACITY OF THE CLAIMANT'S REPRESENTATIVE TO ACT

13 The application names Mr[redacted] and Mr Matthias Geitz as the claimant's managing directors. On 9 February 2026, Mr Matthias Geitz, a solicitor, stated that he had taken over the claimant's defence. At the request of the EPG's legal office, he submitted a power of attorney signed by[redacted] Referring to the case law of the Court of Appeal (UPC_CoA_563/2024, order of 11 February 2025 – Suinno v Microsoft), the rapporteur raised concerns regarding the admissibility of Mr Geitz's representation of the claimant. Mr Geitz, solicitor, subsequently withdrew the notice of representation by a written submission dated 6 March 2026.

14 On 11 May 2026, Mr Geitz, a solicitor, re-notified his representation of the claimant, submitting a power of attorney (Case UPC_CFI_1604/2026). Referring to an extract from the commercial register, he stated that he was no longer the managing director of the claimant. At the interim hearing on 12 May 2026, only Mr Geitz, as the claimant's representative, attended. The question of his capacity to act as a representative was addressed at the interim hearing on 12 May 2026. The defendant reserved the right to make further submissions on this matter.

15 At the hearing on 9 July 2026, the defendant submitted a list of shareholders showing that the claimant's representative holds 40 per cent of the claimant's shares. Against this background, the defendant considers that the claimant's representative is not entitled to represent the claimant. It therefore applied at the hearing for a default judgement to be issued in this regard. The defendant submitted the list of shareholders via CMS on 10 July 2026.

16 The claimant's representative did not contest the assertion that he held 40 per cent of the claimant's shares. He took the view that the claimant's submission was out of time.

ADMISSIBILITY OF THE CLAIM

17 The defendant is of the view that the claim is inadmissible. The claimant does not demonstrate the necessary interest as required by Article 47.6 of the EPGÜ. It is acting as a front for the defendant in the parallel proceedings. In any event, front-man claims constituting an abuse of the law are inadmissible where there is an abusive circumvention of the law. According to its objects, the claimant has no interest of its own in the invalidation of the patent in suit. The link between the claimant and Windhager was made clear by the claimant's representative in the written submission in Annex DP4.

18 Furthermore, against the background of the connection between the claimant and Windhager, there is a separate lis pendens with regard to the appeal proceedings CoA_894/2025. The subject-matter of the dispute in both proceedings is objectively identical.

19 The claimant, on the other hand, argues that the action for nullity under the EPG system is structured as a popular action. Article 65(1) EPGÜ takes precedence over Article 47(6) EPGÜ as lex specialis, meaning that the claimant need not demonstrate any specific personal interest. Furthermore, the claimant has an interest in preventing invalid monopolies that could impede competition. Straw-man actions are admissible provided they do not undermine the integrity of the system. There is no circumvention of the preclusion rule under Article 73(4) of the EPGÜ, as the claimant is not a party to the parallel proceedings.

MERITS

20 The claimant considers the patent in suit to lack novelty in relation to, amongst other things, D1 (Exhibit K3) and a prior publication by the defendant (Exhibits K7 to K11). Furthermore, the claimant considers the patent in suit to lack inventive step.

21 The defendant considers the patent in suit to be novel and inventive in relation to the prior art cited by the claimant.

REASONS FOR THE DECISION

22 The conditions for granting a default judgement are not met, as the claimant has not been in default. The claim is admissible and partially well-founded.

A. No default on the part of the claimant

23 The claimant is not in default.

24 I. Pursuant to Article 37(1) of the Statute of the Unified Patent Court, a default decision may be issued, upon application by a party to the proceedings, in accordance with the Rules of Procedure, if the other party, to whom a document instituting proceedings or an equivalent document has been served, fails to file a written response or fails to appear at the oral hearing.

25 Rule 355.1 of the Rules of Procedure adds that, upon application, a default judgment may be issued, inter alia, where a duly summoned party fails to appear at an oral hearing. Notwithstanding this, the Court may, pursuant to Rule
116.3 of the Rules of Procedure, treat a party not represented at the oral hearing as if it were relying solely on its written submissions (UPC_CoA_907/2025, Order of 18 June 2026, para. 15 – Occlutech GmbH v Lepu Medical (Europe) Cooperatief U.A.). The court is not obliged to grant a default judgement (see also UPC_CFI_213/2025 (Düsseldorf Regional Court), order of 10 July 2025, para. 135 – Aesculap v Shanghai International Holding Corporation GmbH).

26 In accordance with Article 48(1) and Article 48(2) of the EPGÜ, the parties shall be represented by qualified lawyers or qualified patent attorneys.

27 According to the case law of the EPG Court of Appeal, a (legal) representative of a legal person may not act as a representative within the meaning of Article 48 of the EPGÜ on behalf of that person. The same applies to a (legal or patent) lawyer who holds extensive administrative or financial powers within the legal person – for example, as the holder of a senior management or administrative position, or as the holder of a significant shareholding in the legal person (UPC_CoA_563/2024 Order of 11 February 2025, para. 20 et seq. – Suinno v Microsoft).

28 II. The claimant was represented by her solicitor at the hearing and was therefore not in default.

29 Mr Geitz, a solicitor, was present on behalf of the claimant at the hearing. She was therefore not in default.

30 Mr Geitz, as a shareholder holding 40 per cent of the claimant’s shares, is not precluded from representing her within the meaning of Article 48 of the EPGÜ.

31 The effect of, amongst other things, the status of a limited liability company (GmbH) is governed by its articles of association/the *lex societatis*. The EPG must apply the law applicable under this provision in accordance with Article 24(1)(e) of the EPGÜ. Where the law of the country in which the company was incorporated and the law of the state in which the company has its registered office are the same, that law is in any event to be applied as the company’s governing law. In this case, the court must assume (in the absence of any contrary submission on this point) that the claimant was incorporated under German law. Furthermore, it has its

administrative headquarters in the Federal Republic of Germany. German law must therefore be applied as the governing law of the company.

32 Under Section 46 of the (hereinafter applicable) German Act on Limited Liability Companies (GmbHG for short), the general meeting is responsible, amongst other things, for administrative and financial matters. However, in the absence of any contrary provisions in the articles of association (Section 45 GmbHG), decisions are taken by a majority of the votes cast, in accordance with Section 47(1) GmbHG. The defendant has not demonstrated that, in the present case, the articles of association contain a provision deviating from the majority rule set out in Section 47(1) of the GmbHG. In principle, Mr Geitz, the solicitor, cannot achieve the majority required under Section 47 of the GmbHG with 40 per cent of the claimant's shares.

33 No different conclusion follows from the fact that the 40 per cent of the shares confer certain rights upon him; see in particular Section 50 of the GmbHG ('minority rights') and Section 35(1), second sentence, of the GmbHG (passive representation of the company in the absence of management). These rights do not confer upon him any powers within the claimant that would necessitate the exclusion of his legal representation of the claimant.

34 As Mr Geitz, a solicitor, holds only 40 per cent of the plaintiff's shares, he does not, in this respect, hold a
'significant' share in this respect.

35 III. Even if one were to take a different view, there would nevertheless be no grounds for granting a default judgement in the present case. Given that the parties have exchanged comprehensive written submissions on the case and that the court, during the interim hearing, discussed the matter with the parties on the basis of those written submissions and presented a preliminary view, it appears appropriate to bring the proceedings to a conclusion by issuing a final decision in
1. first instance.

B. Admissibility

I. International jurisdiction of the EPG, domestic jurisdiction of the Milan Central Chamber

36 The EPG has jurisdiction over the action for a declaration of invalidity, Article 31 of the EPGÜ, Article 24(4), Article 71a and Article 71b(1) of the Brussels Ia Regulation.

37 The Milan Central Chamber has jurisdiction pursuant to Article 33(4) of the EPGÜ and Annex II to the EPGÜ (as amended).

38 The Milan Central Chamber lacks jurisdiction under Article 33(4), sentence 2 of the EPGÜ in respect of the action brought on 11 September 2025, having regard to the infringement action before the Mannheim Local Chamber, on which a first-instance decision was not handed down until 12 September 2025, was not raised by the

defendant by way of an objection within the time limit set out in Rule 19 of the Rules of Procedure, Rule 19.1(b) of the Rules of Procedure. The jurisdiction of the Milan Central Chamber is therefore deemed to have been recognised, Rule 19.7 of the Rules of Procedure.

II. No other lis pendens arising from the parallel proceedings

39 The subject-matter of the action is not the subject of any other pending proceedings in relation to the parallel proceedings.

40 1. A case pending elsewhere may render an action before the Unified Patent Court inadmissible.

41 It is a principle recognised in European law that lis pendens must be taken into account (see, for example, ECtHR (Grand Chamber), 13279/05, judgment of 20 October 2011 – Nejdet Şahin and Perihan Şahin v. Turkey).

42 Within the scope of the Brussels Ia Regulation, this follows for the courts of various Member States from Article 29 et seq. of the Regulation.

43 Whilst Rule 362 of the VerfO identifies res judicata as an absolute procedural bar, the VerfO does not contain any explicit, exhaustive provision governing how to deal with a case pending elsewhere. Article 33 of the EPGÜ addresses specific scenarios involving concurrent proceedings before different chambers; however, it does not, for example, cover the relationship between an action before the court of first instance and an appeal procedure. However, since the prohibition on bringing an action despite another action on the same matter already being pending is necessary to avoid conflicting, and possibly incompatible, decisions – also with a view to giving effect to the principle of 'res judicata' – other cases pending before the EPG must be taken into account beyond the scenarios set out in Article 33 of the EPGÜ.

44 The assumption of other pending proceedings generally requires that the subject-matter of the dispute and the parties be identical.

45 2. There is no other pending litigation. The subject-matter of the present action and that of the counterclaim in the parallel proceedings are not identical.

46 (a) In the Chamber's view, the following applies: The subject-matter of the action for revocation before the Unified Patent Court is determined not only by the grounds for revocation put forward within the meaning of Article 138(1) EPC, but also by the citations and arguments put forward in support of revocation. This follows from the considerations set out below.

47 The EPGÜ, like the EPC, contains no explicit provision concerning the subject-matter of the proceedings. Of particular note in this regard is Article 76(1) EPGÜ ('Basis of decision and right to be heard'), according to which the Court shall decide in accordance with the claims made by the parties and may not grant more than is claimed. Under Article 76(2) of the EPGÜ, decisions on the merits may only be based on grounds, facts and evidence which have been put forward by the parties or introduced into the proceedings by order of the court, and on which the parties have had the opportunity to comment. Thus, the parties' claims determine the subject-matter of the dispute

(UPC_CoA_898/2025, Order of 27 March 2026, para. 54 – ONWARD Medical v Niche Biomedical).

48 In view of this, the scope of the court's examination in an action for (counter) invalidity is limited to the citations and the arguments based thereon that are introduced into the proceedings by the parties. Unlike some national patent laws (see, for example, Section 87 of the German Patent Act) or Article 114 EPC, the UPC Act does not provide for an ex officio investigation. A decision handed down in the context of an action for (counter) invalidity therefore bases its examination of invalidity on a state of the art, within the meaning of Article 54(2) of the EPC, which is limited by the selection made by the party bringing the action for (counter) invalidity.

49 Accordingly, the subject-matter of the nullity (counter) action before the EPG is also limited to these citations and the arguments based thereon.

50 No other (broader) interpretation follows from Article 33(4), second sentence, of the EPGÜ, according to which, amongst other things, an action for revocation may only be brought before the relevant local or regional chamber if an infringement action concerning the same patent between the same parties is already pending before that local or regional chamber. Article 33(4) of the EPGÜ primarily addresses the (internal) jurisdiction of the chambers of the Court of First Instance. No further implication can be inferred from the provision that the subject-matter of the dispute is determined solely by the identity of the parties and the patent in suit.

51 The Chamber's interpretation of the concept of the subject-matter of the dispute is consistent with the decision of the Court of Appeal (UPC_CoA_227/2024, order of 17 September 2024, para. 27 – Mala v Nokia) to which the defendant refers. It follows from the Appeal Court's order that it regards the 'cause of action' in both of the relevant proceedings before it as almost identical. It identifies as a difference the additional arguments and alternative claims raised in the EPGÜ proceedings. This shows that the Court of Appeal regards arguments and alternative claims as defining the subject-matter of the dispute – otherwise, according to the Court of Appeal's findings, the subject-matter of the dispute would be simply identical, not merely almost identical.

52 The Chamber's assessment is also consistent with the Court of Appeal's case law on the admissibility of introducing new arguments and defences on the basis of Rule 263 of the Rules of Procedure.

53 Rule 263 of the VerfO addresses the admissibility of amendments or extensions to a claim. The circumstances constituting an amendment or extension to a claim are not generally specified. In the case of a counterclaim for nullity, the Court of Appeal has ruled that the claimant in the infringement proceedings is not afforded the opportunity, in its reply to the amendment of the patent in suit, to put forward new grounds for nullity in relation to the patent in suit as granted, such as new prior art (with regard to lack of novelty or lack of an inventive step), unless an

extension of the claim within the meaning of Rule 263 of the Rules of Procedure is permitted (UPC_CoA_71/2025, decision of 29 December 2025, para. 26 – VMR v NJOY; see further discussion of this decision below in para. 164). In our view, this means that it regards the introduction of new prior art, in principle, as an amendment to the subject-matter of the claim.

54 Similarly, the Chamber's assessment is consistent with the interpretation of the subject-matter of the dispute developed by the ECJ in relation to Article 29 of the Brussels Ia Regulation (EU) No 593/2012 and its predecessor provisions. According to this, the decisive factor is whether the basis and subject-matter of the claim are the same (ECJ Case 144/86, judgment of 8 December 1987, para. 14 et seq. – Gubisch Maschinenfabrik v Giulio Palumbo). According to the case-law of the ECJ, the basis of the claim comprises the facts of the case and the legal provision on which the action is based (ECJ Case C-406/92, judgment of 6 December 1994, para. 39 – Tatry). The subject-matter in this sense consists of the purpose of the action (ECJ C-406/92, judgment of 6 December 1994, para. 41 – Tatry), for which the claims in the action must be taken into account (see ECJ C-231/16, judgment of 19 October 2017, para. 40 with further references – Merck KGaA v Merck Co. Inc. and others). Accordingly, actions for annulment which relate to different citations do not have the same 'basis', because the facts on which they are based are not the same (in this sense, see the aforementioned decision of the Court of Appeal, UPC_CoA_227/2024, order of 17 September 2024, para. 27 – Mala v Nokia).

55 Furthermore, it should be noted that the Chamber's assessment does not give rise to any concern that validity challenges might be tactically split across several proceedings, as the defendant suggested during the interim hearing. A tactical splitting can be countered by means of the test of legal interest.

56 b) The parties have not argued that the citations submitted by the claimant in these nullity proceedings were or are the subject matter of the parallel proceedings. Against the legal background explained above, the subject matter of the present nullity proceedings is not identical to that of the counterclaim for a declaration of nullity in the parallel proceedings. For this reason alone, there is no other lis pendens. The question of the identity of the parties is irrelevant at this stage.

III. The claimant's interest within the meaning of Article 47(6) of the EPGÜ

57 The claimant is 'affected' by the patent in suit within the meaning of Article 47(6) of the EPGÜ.

58 1. Article 47(6) of the EPGÜ generally requires the claimant in nullity proceedings to be affected. This requirement must be interpreted broadly.

59 (a) As indicated by the heading of the provision, Article 47 of the EPGÜ addresses the parties. Whilst Articles 47.1 to 47.4 concern infringement proceedings and Article 47.5

concerns infringement proceedings in which a counterclaim for revocation is to be brought,

Article 47(6) of the EPGÜ provides: ‘Any other natural or legal person or any association which is affected by a patent and is entitled to bring an action under the national law applicable to it may bring an action in accordance with the Rules of Procedure.’

60 Article 47.6 of the EPGÜ addresses, amongst other things, actions for revocation as a ‘catch-all provision’. Contrary to the claimant’s view (reply, para. 8 et seq.), Article 65.1 of the EPGÜ is not lex specialis in relation to Article 47.6 of the EPGÜ in so far as it is not necessary for a party to be affected in order to bring an action for revocation. This is supported by the fact that Article 47 of the EPGÜ is classified within the general provisions of Part III, ‘Organisation and Procedural Rules’, of the EPGÜ. Thus, from the perspective of legal systematics, the provision is intended to apply in principle to all proceedings before the EPG. Furthermore, contrary to the plaintiffs’ view (reply, para. 8), Article 65(1) EPC does not state in any language version that ‘any person’ may bring an action for revocation. Article 65(1) EPC refers only to an action for revocation or a counterclaim for revocation as the basis for a decision on the validity of a patent.

61 (b) The ‘interest’ required by Article 47(6) of the EPGÜ for invalidity actions must be interpreted broadly. A distinction must be made between private and commercial conduct, as Article 27(a) of the EPGÜ demonstrates. Since legal persons cannot act ‘privately’, their conduct must always be classified as commercial. In principle, legal persons have a stake within the meaning of Article 47(6) of the EPGÜ for bringing an action for nullity. They have a fundamental interest in ensuring that patents which should not have been granted on the grounds of a ground for nullity are not upheld. This applies irrespective of whether the companies are already active in a relevant sector. Accordingly, the claimant in this case has a legitimate interest.

62 2. In the present case, no different conclusion follows from the fact that the claimant is to be regarded as a ‘front’ for the counter-claimant in the parallel proceedings.

63 (a) The term ‘front company’ refers to legal entities that exist only in name, without any actual or significant business activities. An indication that a company is a front company may be that it has no assets or employees of its own. The circumstances must allow the conclusion that it is being used by a person (natural or legal) (the ‘beneficial owner’) to conceal their identity, or to carry out activities which the beneficial owner cannot or does not wish to carry out (UPC_CFI_258/2025 (Paris Circuit Court), Order of 1 September 2025, para. 13 et seq. – Seoul Viosys v Emporia (on Article 33(4) of the EPGÜ); UPC_CFI_999/2025 (Paris Regional Centre), Order of 26 January 2025, para. 38 – ALD v NANOVAL (on Article 33(4) of the EPGÜ).

64 The burden of proof regarding the existence of a ‘front man’ situation generally lies with the party invoking such a situation (UPC_CFI_258/2025 (Paris Regional Centre), order of 1 September 2025, para. 22 – Seoul Viosys v Emporia (on Article 33(4) of the EPGÜ)), in which

the burden therefore generally lies with the opposing party. However, it may be sufficient to put forward serious indications of a 'front man' arrangement, as the party relying on this will often have no insight into the relationship between the front man and the person pulling the strings (UPC_CFI_255/2023 (Paris Regional Centre), Order of 13 November 2023, para. 61 – Meril v Edwards).

65 The EPGÜ does not, in principle, prohibit a patent from being challenged by different entities, even if they are organisationally and/or economically linked (UPC_CFI_258/2025 (Paris Regional Centre), Order of 1 September 2025, para. 27 – Seoul Viosys v Emporia (on Article 33(4) of the EPGÜ)).

66 b) Accordingly, the claimant is not a 'straw man'.

67 As evidenced by the extract from the commercial register (Annex DP1), the claimant was incorporated by a memorandum of association dated 11 April 2014. The defendant has not demonstrated that the claimant has no assets and/or no employees (beyond the share capital of €25,000). It would, however, in principle have been possible for the defendant to make such a submission, given that the claimant is subject to the principle of disclosure (Section 325 of the German Commercial Code; HGB for short) and must therefore publish annual accounts. The defendant has not argued that the claimant did not publish any annual accounts or that, in the present case, the defendant was unable to obtain any information from the published annual accounts.

68 As explained above in paragraph 61, the claimant has a legitimate interest in the action for annulment.

69 The fact that the claimant is coordinating the action for annulment with the parallel proceedings, as is apparent from the letter DP4 to which the defendant refers, does not negate its own legal interest in the action for annulment as a company that has been in existence for several years. This also applies to the defendant's argument put forward at the interim hearing that the counter-claimant for annulment in the parallel proceedings may have used the claimant in the present case as a front because it possibly feared that the claim would be dismissed on the grounds that the court assumed the subject-matter of the dispute to be identical, so that, in any event, there was 'intent' to circumvent the rules.

70 In view of this, it can be left open whether the EPGÜ prohibits straw man actions in principle, or whether (only) straw man actions that would result in a circumvention of the rules of the EPGÜ and the Rules of Procedure might be regarded as inadmissible, as may be the case according to the case-law of the EPO to which the defendant refers (see, for example, the Enlarged Board of Appeal, G3/97, decision of 21 January 1999, para. 4.1 et seq. – Opposition on behalf of a third party/INDUPACK).

C. Merits

71 The action is partially well-founded. Claim 1 of the patent in suit lacks novelty in relation to D1. The defendant's auxiliary claim 1, however, is novel and inventive.

I. Interpretation of the patent in suit

72 According to claim 1, the patent in suit relates to an edging for flowerbeds and grassed areas.

73 The patent specification considers it to be well known to manufacture flowerbed edging from sheet metal strips, whereby several elongated sheet metal strips are joined together. It is further considered to be well known to provide the long sides of the sheet metal strips with flanges on at least one side in order to protect the sheet metal strips against tearing and to avoid a sharp edge, [0002]. As described in [0003], such flowerbed edging consisting of sheet metal strips joined together is generally not bendable and therefore cannot be bent into curved flowerbed edging. In the case of sheet metal strips that can be bent lengthways but can only be joined in a straight line, it is known to design the joint such that the respective end face of the sheet metal strip is formed as a tongue which is slid into a corresponding pocket-shaped receptacle on the end face of the opposite sheet metal strip, [0004]. This requires that the sheet metal strips be inserted against one another and joined together precisely along their longitudinal axis, [0005]. Such an assembly has the disadvantage that the sheet metal strips can only be fitted together once they have been fully inserted into one another, which means that, in the case of relatively large bed edgings with a radius of, for example, 2 m, three or four sheet metal strips would have to be fully inserted into one another before being installed in the ground as a bed edging, [0005]. The specification of the patent in suit regards this as difficult to handle and an undesirable method of assembly, [0006].

74 In [0007], the patent specification in question cites US 2006/0150480 A1. With regard to the system described therein, the patent specification criticises the fact that the embodiments can only be inserted into the ground whilst assembled. It states that assembly of the individual panels in the ground is not possible due to the design of the interlocking connections.

75 Against this background, the patent in suit describes the problem underlying the invention as being to further develop a flowerbed edging comprising a lockable sheet metal strip of the type mentioned at the outset in such a way that the sheet metal strips can be fixed or anchored in the ground one after the other, thereby allowing the sheet metal strips to be assembled sequentially without the need to first assembling all the sheet metal strips together and then installing them in the ground, [0008].

76 To solve this problem, the specification of the patent in suit provides for a device in accordance with claim 1 of the patent in suit, the features of which can be categorised as follows (alternative categorisation by the parties in square brackets):

Edging for flowerbeds and grassed areas [M1.1]

1. The edging comprises at least two sheet metal strips; [M1.2 – Part 1]
2. The two sheet metal strips
   2.1. can be joined together at the ends; [M1.2 – Part 2]
   2.2. have upper long sides and [are] flanged at least along these; [M1.3]
   2.3. have end faces and form, in the area of these connecting ends; [M1.4]
      2.3.1. the connecting ends are inserted into one another with mutual overlap; [M1.5]
      2.3.2. one connecting end is formed as a tongue; [M1.6]
      2.3.3. a receiving slot is provided at the opposite connecting end; [M1.7 – Part 1]
      2.3.4. the tongue engages with the receiving slot; [M1.7 – Part 2]
      2.3.5. the receiving slot is arranged in the flange of [one] of the connecting ends; [M1.8]
      2.3.6. the receiving slot can be fitted onto the tongue at the other connecting end in a direction perpendicular to the longitudinal extent of the sheet metal strip. [M1.9]

77 Some features require further explanation.

78 According to the case law of the Court of Appeal of the EPG (UPC_CoA_335/2023, Order of 26 February 2024, para. 73 et seq. – NanoString v 10x Genomics), the following principles apply to the interpretation of a patent claim:

79 The patent claim is not merely the starting point, but the decisive basis for determining the scope of protection of a European patent. The interpretation of a patent claim does not depend solely on its exact wording in the linguistic sense. Rather, the description and the drawings must always be taken into account as aids to the interpretation of the patent claim and should not be used merely to resolve any ambiguities in the patent claim. However, this does not mean that the patent claim serves merely as a guideline and that its subject-matter also extends to what, following an examination of the description and the drawings, appears to be the patent proprietor's claim for protection.

80 The patent claim must be interpreted from the perspective of a person skilled in the art.

81 These principles for the interpretation of a patent claim, which are intended to provide appropriate protection for the patent proprietor whilst at the same time ensuring sufficient legal certainty for third parties, apply equally to the assessment of infringement and the validity of a European patent.

82 Claim features must be interpreted in the light of the claim as a whole (UPC_CoA_1/2024, Order of 13 May 2024, para. 29 – VusionGroup v Hanshow). This

means that, in the light of the claim as a whole, it must be determined what technical function the individual feature performs, both in its own right and within the overall context of the claim (UPC_CFI_252/2023 (Munich Regional Centre), decision of 17 October 2025, para. 8.4 – Nanostring v President and Fellows of Harvard College).

83 The function of a structural feature must be taken into account when interpreting the claim. However, the interpretation must also take into account the spatial and physical requirements of the feature, as taught by the patent (UPC_CoA_789/2025, Order of 6 March 2026, para. 35 – Dyson v Dreame). The description and figures may demonstrate that the patent specification defines terms independently and, in this sense, constitutes a glossary in its own right (see, for example, UPC_CFI_252/2023 (Munich Regional Court), decision of 17 October 2024, para. 8.4 – Nanostring v President and Fellows of Harvard College). Examples of implementation set out in the description do not, as a rule, limit the scope of the claim (see, for example, UPC_CFI_248/2024 (Munich Local Court), decision of 22 August 2025, para. 94 – Brita v AQUASHIELD).

84 The person skilled in the art will endeavour to interpret the patent in a manner that is technically meaningful and takes into account the entire disclosure of the patent. The patent must be interpreted in a technically meaningful manner, by a 'mind willing to understand, not a mind desirous of misunderstanding' (see UPC_CFI_497/2024 and UPC_CFI_571/2024 (Milan Regional Court), decision of 23 October 2025, para. 2.2 – bioMérieux v Labrador). The interpretation of claims is a question of law (UPC_CoA 768/2024, decision of 20 April 2025, para. 37 – Insulet v EOFlow; UPC_CoA_899/2025, decision of 30 March 2026, para. 66 – Sinocare v A. Menarini Diagnostics).

85 Statements of purpose generally define the protected subject-matter in such a way that it must be objectively suitable for use in performing the function and serving the purpose specified in the patent claim. This presupposes a corresponding spatial and physical configuration in order to be able to fulfil the assigned function or purpose (UPC_CoA_382/2024, Order of 14 February 2025, para. 47 – Abbott v Sibionics; UPC_CFI_836/2024 (Munich Regional Court), decision of 20 November 2025, para. 38 – BAUSSMANN v Raimund Beck; UPC_CFI_248/2025 (Munich Local Chamber), decision of 22 August 2025, para. 102 – Brita v AQUASHIELD).

86 According to the definition provided by the Mannheim Local Chamber in the parallel proceedings, with which the Chamber concurs, the person skilled in the art is a mechanical engineer who has completed a degree at a university of applied sciences and has several years' professional experience, in particular in the field of sheet metal constructions for gardening and landscaping. The Chamber is therefore convinced that this definition has a slightly different focus to that put forward by the claimant in her reply, para. 53, although the claimant herself, in her definition of the 'expert' in the reply, para. 69, tends to align with the Chamber's view.

87 From the perspective of the person skilled in the art, the following interpretation arises:

88 Feature 2.3.1 addresses the fact that the connecting ends are inserted into one another in a mutually overlapping manner. According to the literal meaning and their function, connecting ends within the meaning of the feature are the end regions at the front faces which contribute to the connection of two sheet metal strips. The claim does not address the 'degree' of overlap of the connecting ends of two connected sheet metal strips. The relevant person skilled in the art recognises that an overlap is sufficient to ensure a connection between the metal strips that is suitable for use as a garden bed edging (see UPC_CFI_338/2024 (Mannheim Regional Court), decision of 12 September 2025, para. 46 – belissa HAAS v Windhager).

89 According to feature 2.3.2, one end of the connection is formed as a tongue. According to feature 2.3.4, the tongue engages with the receiving slot (feature 2.3.3) of the opposite end of the connection, which is arranged in the flange of that end. In doing so, according to feature 2.3.6, the receiving slot can be fitted onto the tongue at the other connecting end in a direction perpendicular to the longitudinal extent of the sheet metal strip. The claim does not specify the design of the tongue or the extent to which the tongue engages with the receiving slot.

90 According to feature 2.3.6, the receiving slot can be fitted in a vertical direction. From the function of the invention – enabling the assembly of a further sheet metal strip to a sheet metal strip already in the ground by slotting it on from above and pressing it downwards in a direction perpendicular to the longitudinal extent, [0011], [0014], [0017], (cf. UPC_CFI_338/2024 (Mannheim Regional Court), decision of 12 September 2025, para. 55 – belissa HAAS v Windhager) – it follows that 'perpendicular' here means a direction perpendicular to the longitudinal axis. This is also shown in Figure 11 of the patent in suit.

91 The feature does not address any 'degree' of slotting. Once again, the person skilled in the art will recognise that a degree of slotting is sufficient to ensure a connection between the metal strips that is suitable for use as a garden bed edging. The person skilled in the art is made aware of this by [0014] lines 44–51, according to which one sheet metal strip is slid onto the other in a vertical direction, whereby the corresponding parts of the two connection points of the sheet metal strips come into positive engagement with one another, and the tongue on one sheet metal strip engages with a receiving slot on the flanged edge of the other sheet metal strip.

92 It is clear from the literal meaning and wording of the feature that it addresses a statement of purpose. Although Claim 1 of the patent in suit, according to the literal meaning of feature 2.3.1, addresses connecting ends that are inserted into one another (and thus a product that has reached a state in which the connecting ends of two metal strips are already inserted into one another in a mutually overlapping manner), Claim 1 of the patent in suit, which is formulated as a device claim, does not require that the connecting ends have been inserted vertically into one another. Rather, feature 2.3.6 refers to the suitability of the receiving slot being able to be inserted in a vertical

direction (…) onto the tongue at the other connecting end.

II. Lack of novelty of claim 1 of the patent in suit (as granted) in relation to D1

93 Against the background of the aforementioned interpretation, claim 1 is not novel in relation to US 2,821,809 (Annex K3 – D1, hereinafter referred to as D1).

94 1. Under Article 54 EPC, an invention is considered new if it does not form part of the state of the art.

95 The assessment of novelty within the meaning of Article 54(1) EPC requires a determination of the full content of the prior publication. The decisive factor is whether the subject-matter of the patent in suit, with all its features, is directly and unambiguously disclosed in the prior art (see UPC_CoA_182/2024, Order of 25 September 2024, para. 123 with further references – Mammut v Ortovox). A technical teaching does not form part of the state of the art if it differs in at least one feature from what is known in the state of the art. In this respect, the (sole) determining factor is what the person skilled in the art, applying their technical knowledge as at the filing date or priority date, directly and unambiguously derives from a document forming part of the state of the art (see UPC_CoA_312/2025, decision of 2 June 2026, para. 123 with further references – Kodak v Fujifilm). This refers to the disclosure in a single (1) document. The decisive factor in determining the content of a prior art document is the technical functioning, not the chosen designation for a component (see, in this regard, UPC_CFI_480/2025 (Milan Regional Court), decision of 10 April 2026, para. 86 – Fisher v Flexicare).

96 Where a device claim contains a statement of purpose, the sole relevant factor for the novelty assessment under Article 54 EPC is, as a general rule, whether the prior art already discloses a device which possesses all the spatial and physical features claimed by the patent for the device, irrespective of its intended use. The situation is different only if the device disclosed in the prior art is unsuitable for the intended use of the patent or if a modification is still required before it can be used for that purpose (UPC_CFI_248/2024 (Munich Regional Court), decision of 22 August 2025, para. 144 – Brita v AQUASHIELD).

97 2. Against this background, the subject-matter of patent claim 1 is not novel in relation to US 2,821,809 (Annex K3 – D1, hereinafter referred to as D1).

98 According to D1, the grant of the patent was published on 4 February 1958.

99 a) With the edging referred to therein as ‘metal edging’, D1 discloses an edging for flowerbeds and grassland areas. D1 refers to its suitability for use as edging for flowerbeds and grassland areas in column 1, lines 16 to 18.

100 D1 explains that the edging is intended to comprise a plurality of strips, all of which have longitudinally extending slots that are transversely offset at one end. The material of the edging element is stepped laterally between the slots so as to

accommodate the adjoining end of another edging element (col. 1, l. 23 ff.). On the upper edges ('top edges') are arranged downward-facing flanges ('flanges'), which provide a rolled upper edge in the edging. Each flange is cut off at the end of the member with the laterally offset tongue to allow for a flush or butt joint between adjacent strips (col. 1, lines 27 ff.). Figures 1 to 5 show examples of embodiments:

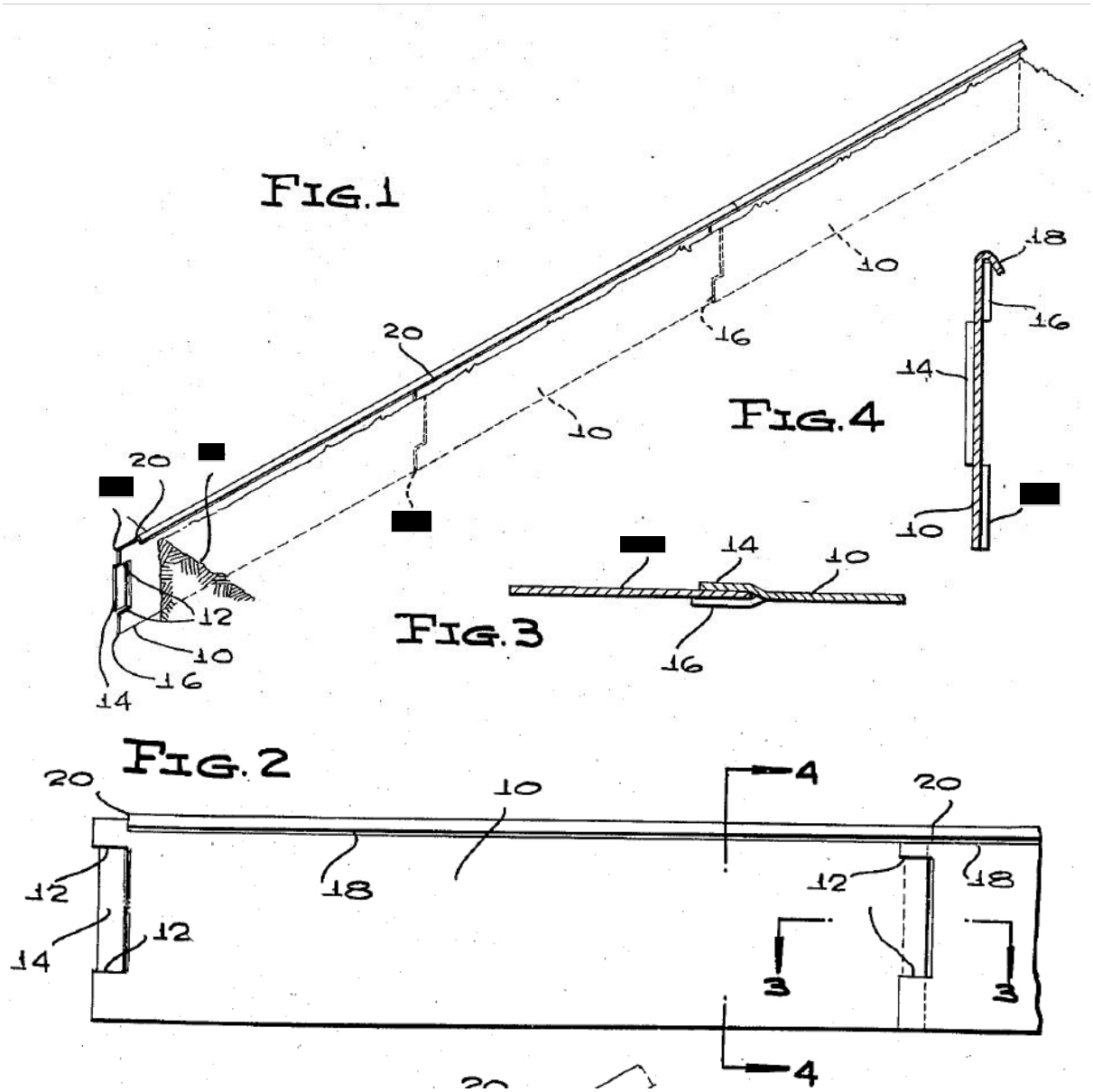

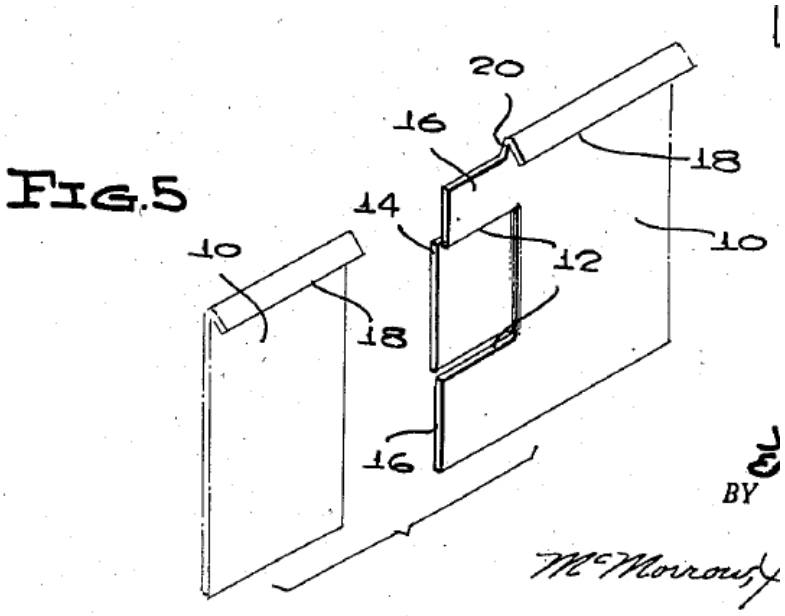

101 Figure 5 (an exploded view, col. 2, line 3 ff.) shows two strips (designated 10) in their unassembled state. They feature a downward-facing rolled edge/flange (designation 18). To the left of the flange, in the right-hand sheet strip in Figure 5, a recess is shown, designated by reference number 20. In the strip shown on the right in Figure 5, a component (reference number 14) referred to in D1 as a 'tongue' is arranged, defined by two slots (reference number 12). The tongue 14 is offset laterally from the rest of the strip; see column 2, line 25. Reference numbers 16 refer to the 'portions' of the strip above and below the tongue 14.

102 Figure 1 is a perspective view of the metal edging in use, i.e. after the assembly of several strips (col. 1, l. 64 ff.). Figure 2 is an enlarged view of the assembled product (col. 1, l. 67/68). Figure 3 is a cross-section through one of the joints (col. 1, l. 69 et seq.). Figure 4 is a cross-sectional view shown transversely (col. 2, l. 1, 2).

103 (b) D1 discloses the subject-matter of claim 1 of the patent in suit directly and unambiguously. In this respect, the defendant only disputes the disclosure of feature 2.3.6 in D1.

104 (aa) According to its heading ('metal edging'), D1 discloses an edging suitable for use in flowerbeds and grassland areas (col. 1, l. 16/18), such that the generic term of the patent in suit is disclosed.

105 bb) In accordance with feature 1 of the patent in suit, the edging disclosed in D1 consists of at least two metal strips. For example, Fig. 1 of D1 shows three sheet metal strips ('strips 10'). Column 2, lines 8 to 9 refers to 'a plurality of end-abutting, rectangular, elongated strips 10'.

106 cc) In accordance with features 2 and 2.1 of the patent in suit, the two metal strips can be joined together at their ends. With regard to the joining, D1 describes, for example, in column 2, lines 52 to 54, that to assemble the edging, the unslit end of one strip is inserted between the tongue 14 and the portions 16 of the immediately adjacent strip and, as shown in Fig. 3, is pressed into the space between the tongue 14 and the portions 16 over the entire depth of the slit 12 ("To assemble the edging, the unslit end of one strip is inserted between the tongue 14 and portions 16 of the next adjacent strip, and is pressed into the space between said tongue 14 and portions 16 for the full depth of the slit 12 as shown in Fig.
3."). Among other things, the referenced Fig. 3 shows that this joining takes place at the ends (i.e. at the shorter ends) of the two sheet metal strips.

107 dd) As disclosed in D1, column 2, lines 32 to 33, the upper longitudinal edge of each strip 10 is provided with a downwardly rolled flange 18 ("The upper longitudinal edge of each strip 10 is formed with a downwardly rolled flange 18."). Consequently, the two sheet metal strips of the frame disclosed in D1 have upper longitudinal sides within the meaning of feature 2.2 of the claimed patent and are flanged at least at these points. Figure 5 further illustrates these features.

108 ee) It follows directly from the manner of joining two metal strips disclosed in D1, as described above in relation to features 2 and 2.1, that the two metal strips of the edging disclosed in D1 have end faces within the meaning of feature 2.3 and form connecting ends in the region of these end faces.

109 ff) It follows directly from the manner of joining two metal strips, as described above in relation to features 2 and 2.1 and disclosed in D1, that the connecting ends of the two metal strips of the edging disclosed in D1 are inserted into one another in a mutually overlapping manner within the meaning of feature 2.3.1 of the patent in suit.

110 gg) The free (unflanged) end of one of the sheet metal strips, comprising the area designated in D1 as tongue 14 and sections 16, is a connecting end formed as a tongue within the meaning of feature 2.3.2. As the claimant correctly points out (Statement of Claim, para. 53), the fact that D1 refers to this tongue as 'portions' (16) and 'tongue'
(14), whereas only the reference number (14) 'tongue' indicates the tongue within the meaning of D1, is irrelevant according to the legal standard for the novelty assessment explained above.

111 The tongue within the meaning of the patent in suit is therefore to be regarded as the entire part marked in blue by the Board in Figure 5 of D1, shown below, i.e. the part designated as tongue 12 in D1 together with sections 16 of the metal strip 10:

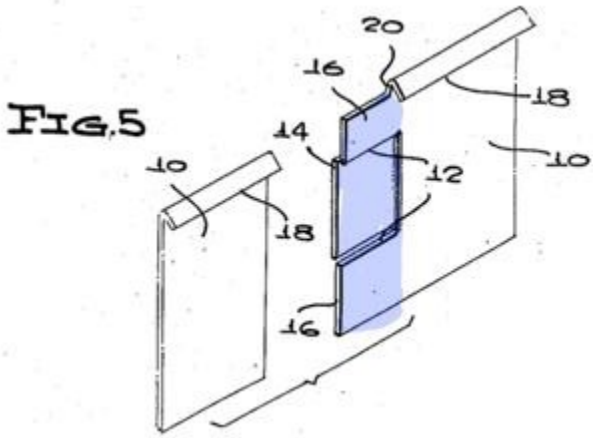

112 (hh) In the case of the frame known from D1, a receiving slot is also provided in the form of the bent upper longitudinal edge 18, into which the tongue according to the patent in suit (in the words of D1:
'portions'/sections 16 plus 'tongue 14') – a receiving slot is provided, which is arranged at the opposite connecting end. This is – as explained
– located in the flange of [one] connecting end. This is the flange of the sheet metal strip shown on the left in Figure 5 above. Features 2.3.3, 2.3.4 and 2.3.5 are therefore also disclosed in D1.

113 ii) The embodiment shown in Figures 1 to 5 of D1 allows the receiving slot to be fitted onto the tongue at the other connecting end in a direction perpendicular to the longitudinal extent of the sheet metal strip. Although D1, in its description of the joining of the sheet metal strips in columns 2, lines 52 to 54, appear to envisage insertion in the longitudinal direction of the metal strips (as suggested by the wording 'for the full depth of the slit 12' as well as the wording 'the unslit end of one strip is inserted between the tongue 14 and the **portions** 16 (…)', emphasis added by the Board). However, this is irrelevant, as feature 2.3.6 requires only a suitability for insertion (from 'insertable') and such suitability is also present in the embodiment shown in Figures 1 to 5. Consequently, feature 2.3.6 is also disclosed in D1.

114 This suitability for attachment in a direction perpendicular to the longitudinal extent of the sheet metal strip is correctly explained by the claimant with the following modification of Fig. 5 of D1 (Statement of Claim, para. 61):

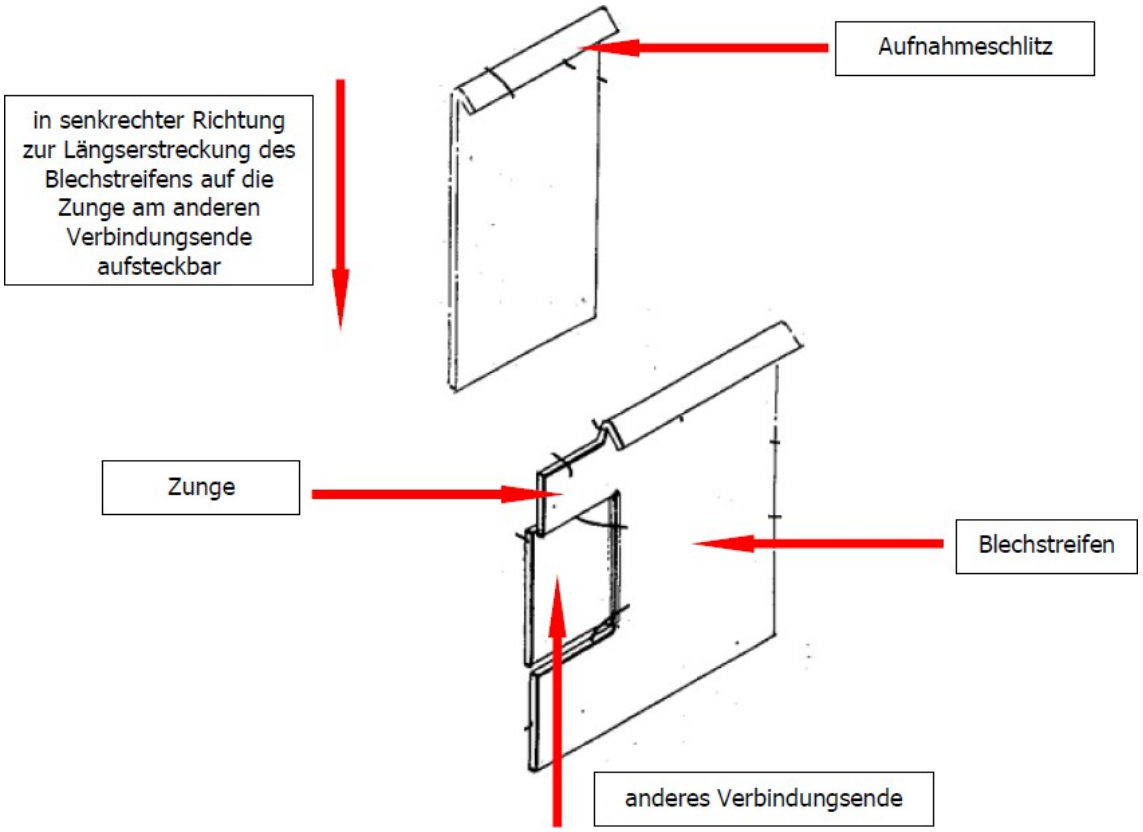

115 Contrary to the defendant's view (Statement of Defence, p. 15), the connection interfaces or slots of the sheet metal strips according to the invention do not prevent the receiving slots from being fitted in a direction perpendicular to the longitudinal direction.

116 The defendant's assumption that the width of the slots 12 in D1 is not constant but tapers from the start to the end of the slot (Reply, p. 15) finds no support upon an impartial examination of the passage referred to by the defendant (D1, col. 2, lines 50–54) and the figures 1 and 3 in D1, to which reference is also made, is not supported. The fact that the description in col. 2, l. 50–54 states that the unslotted end of a strip is inserted between tongue 14 and the sections 16 of the next strip and pressed into the space between tongue 14 and the sections 16 over the entire depth of the slits 12, merely describes, on a technical assessment, that in a specific embodiment the slots 12 may be slightly narrower than the thickness of the unslit end, so that the latter is inserted into the slot with the application of force (hence:
'pressed') into the slot. However, this does not imply that the (slightly narrower) slots 12 become narrower in the depth direction (in the longitudinal direction of the sheet metal strips). The passage in question says nothing about whether the force required to insert the unslotted end increases, meaning that the user must press harder as the end is inserted deeper.

117 The Court fails to see why – as the defendant explains on page 16 of the Reply and on p. 9 et seq. of the Rejoinder – pressing into the slots, in the form of pushing or pressing a

component with force into an opening provided for that purpose to create a force- and

form-fitting connection is only possible if the width of the slots is not entirely constant from one end of the slot to the other, is not apparent to the Court. Pressing into the slots can also take place with slots of constant width. The fact that the end is pressed over the entire depth, as stated in D1, leaves open the question of how and with what intensity the pressing must be carried out. Without further details regarding the method of pressing, the person skilled in the art cannot deduce from the passage cited by the defendant whether the slots 12 have a constant or a tapered width.

118 Nor does the evidently schematic Fig. 1 suggest otherwise. The greater width at the start of the slot identified by the defendant there cannot even be recognised beyond doubt in the significant enlargement of a detail of Fig. 1 produced by the defendant and reproduced on page 17 of the reply (reproduced below). Furthermore, it is not apparent what in D1 would lead the person skilled in the art to analyse this detail of Fig. 1 of D1 in this way.

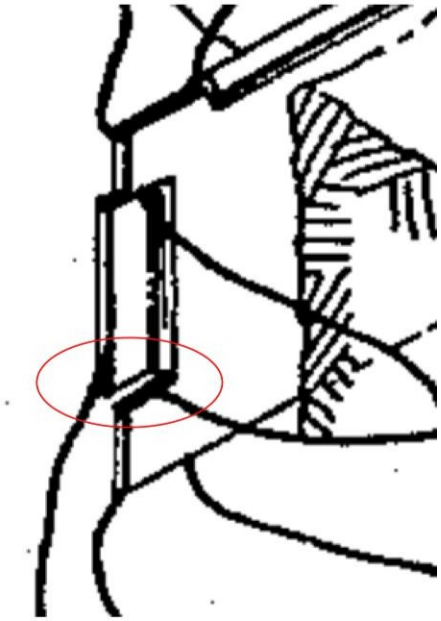

119 For the same reasons, the defendant's arguments regarding the division of the slots into three sections of different widths and the drawing produced by the defendant (reproduced below from page 18 of the reply) find no support in D1. Nowhere in D1 can such details regarding the configuration of the slots be identified.

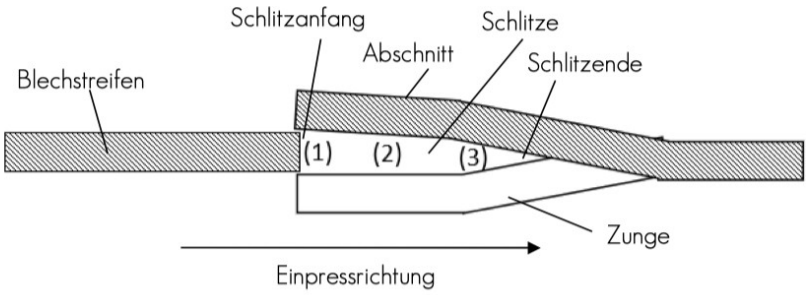

Abbildung 2: Ausgangsposition der Verbindung der Blechstreifen

120 Even if one assumes, in favour of the defendant, that the slot tapers, this does not lead to the conclusion that the embodiment shown in Figures 1 to 5 of D1 does not permit the receiving slot to be fitted onto the tongue at the other end of the joint in a direction perpendicular to the longitudinal extent of the sheet metal strip. In so far as the defendant explains (Reply, page 17) that, due to a tapered slot profile, a sheet metal strip cannot be fully inserted over the entire depth of the slot in a direction perpendicular to the longitudinal extent of the sheet metal strip, as the decreasing width of the slots would grip beneath the outer contour of the metal strip and thereby geometrically prevent further penetration to the full depth of the slot, it fails to recognise that claim 1 of the patent in suit does not require any specific degree of overlap between the metal strips, as explained above in paragraph 88. The same applies to Figure 13 of D1 (duplicate, p. 11), to which the defendant refers. Inserting the unslit end in a direction perpendicular to the longitudinal axis of the sheet metal strip, whereby the unslit end is inserted only into the front part of the slots 12, is also readily possible even with a tapered slot 12 and, according to the above explanations, fulfils feature 2.3.1, according to which the connecting ends are inserted into one another in a mutually overlapping manner. The same applies to the discussion at the hearing, according to which D1 precludes insertion from above because the sheet metal is too thick to fit into the slot; otherwise, the connection would be loose. Nor does the lower section (‘portion’ 16) compel the person skilled in the art, contrary to the view expressed by the defendant during the hearing, to assume that insertion from above is not possible. Even assuming the design shown in the defendant’s drawing reproduced above in paragraph 119, both the upper slot 12 and the lower slot 12 are wider than the sheet metal strip to be inserted into the slots, at least in the area designated by the defendant as the ‘start of the slot’ (shown on the left in the drawing), as otherwise even the insertion parallel to the longitudinal direction – which the defendant has taken into account – would not be possible. This is also shown in the defendant’s drawing. However, if the upper slot 12 and the lower slot 12 are designed, at least in the area of the ‘start of the slot’, such that they are wider than the sheet metal strip to be inserted, then, at least in this area, both insertion parallel to the longitudinal direction and insertion perpendicular to the longitudinal direction are possible. The fact that the inserted sheet metal may then only be inserted in the area of the

‘start of the slot’ (and can only be inserted there) and that, consequently, there is only a small overlap between the metal strips, is irrelevant, since – as explained – no specific degree of overlap between the metal strips is required.

121 According to the legal standard for the novelty examination explained in point 1, the sole decisive factor is that D1 discloses a device which possesses the spatial and physical features of claim 1. This is the case. Neither is the device disclosed in D1 unsuitable for the intended purpose of the patent, nor does it need to be modified in order to be used for that purpose.

122 The fact that D1 – as the defendant correctly points out (Reply, pages 19 and 20) – focuses on insertion parallel to the longitudinal extent of the sheet metal strip and, in Fig. 3, on a fully inserted end position of the sheet metal strip, does not alter the fact, for the same reasons, that D1 discloses a frame which is *suitable* (‘slip-on’) in which the receiving slot is fitted onto the tongue at the other end of the joint in a direction perpendicular to the longitudinal extent of the sheet metal strip.

123 Consequently, D1 discloses a frame comprising all the features of claim 1 and anticipates its subject-matter in a manner detrimental to novelty.

124 3. The question of whether further citations put forward by the claimant are detrimental to the novelty of claim 1 of the patent in suit, as granted, is therefore irrelevant at this stage.

125 4. The defendant does not claim to defend any sub-claims of the granted version independently. Consequently, the claimant’s principal claim must be upheld on the grounds of the lack of patentability of the subject-matter of claim 1 (UPC_CoA_473/2025, decision of 13 July 2026, para. 56 – Fujifilm v Kodak; UPC_CFI_714/2025 (Munich Regional Court), decision of 21 July 2026, para. 68 – Raimund Beck Nageltechnik v BAUSSMANN Collated Fasteners; for the reverse case, see UPC_CoA_622/2025 and UPC_CoA_623/2025, final decision of 27 May 2026, para. 109 – Hefei v Grundfos).

III. Novelty of claim 1 of the patent in suit as set out in auxiliary claim 1 126

Claim 1 of the patent in suit as set out in auxiliary claim 1 is novel within the meaning of Article 54
of the EPC.

127 1. Claim 1 of auxiliary request 1 reads as follows (see Annex B1; changes from request 1 as granted are underlined):

Edging for flowerbeds and grassland areas comprising at least two sheet metal strips which can be connected to one another at their ends, which are crimped at least along their upper longitudinal edge and, in the region of their ends, form connecting ends (2, 3) which are inserted into one another in a mutually overlapping manner, one connecting end being formed as a tongue (4) which engages in a receiving slot (16) arranged in the opposite connecting end**, characterised in that** a receiving slot (16), situated in the flanging of one connecting end (3), can be fitted onto the tongue (4) at the other connecting end (2), the tongue (4) being formed as an extension of the sheet metal strip (1) and being flexibly attached to the sheet metal strip.

128 Auxiliary claim 1 incorporates claim 6 (as granted) into claim 1.

129 The feature newly added in auxiliary claim 1 ('wherein the tongue (4), as an extension of the sheet metal strip (1), is attached to the sheet metal strip in a manner that allows it to be bent') requires a design of the tongue that enables the tongue to be bent in a specific, functional manner at the connection point. A person skilled in the art will recognise that the bending functionally addresses bendability using the means customary when laying flowerbed edging, and thus also by hand, since the flowerbed edging according to the invention aims to achieve simple installation ([0006]) and the use of special tools or the application of increased force for the bending is not mentioned.

130 2. Claim 1, as set out in auxiliary request 1, is novel in relation to D1.

131 With regard to claim 6 in the statement of claim, the claimant does not allege a lack of novelty relative to D1, but only relative to K8 (statement of claim, paragraphs 111 to 113). With regard to auxiliary claim 1, in its reply it relies solely on a lack of inventive step based on D1; it therefore does not allege that there is a lack of novelty relative to D1.

132 The Court sees no evidence of a lack of novelty in relation to D1.

133 3. Claim 1, as set out in auxiliary claim 1, is novel in relation to K7 and K8.

134 (a) In the statement of claim, the claimant alleges that the subject-matter of claim 1, as granted by the defendant, was published prior to the filing date in the annexes K7 et seq.

135 She submits (initially with regard to claim 1 as granted) that the defendant, or rather its legal predecessor (extract from the commercial register as Annex K9), offered, amongst other things, on 31 January 2009 under the domain http://www.plan-g.biz a set of five metal lawn edging pieces as follows (Statement of Claim, p. 7, see also – with some differences – Annex K7):



136 This lawn edging had been assigned the item number 99680, as evidenced by the screenshot displayed below (Statement of Claim, p. 8).



137 The image link of the middle image in the Appendix K8 https://web.archive.org/web/20090131215055/http://www.plan-g.biz/thumbs/Steckverbindung_99680.jpg. From this it follows that thaton the website dated 31 January 2009, the plug connection in particular had also been published (Statement of Claim, p. 8).

138 Exhibit K8 is reproduced below:

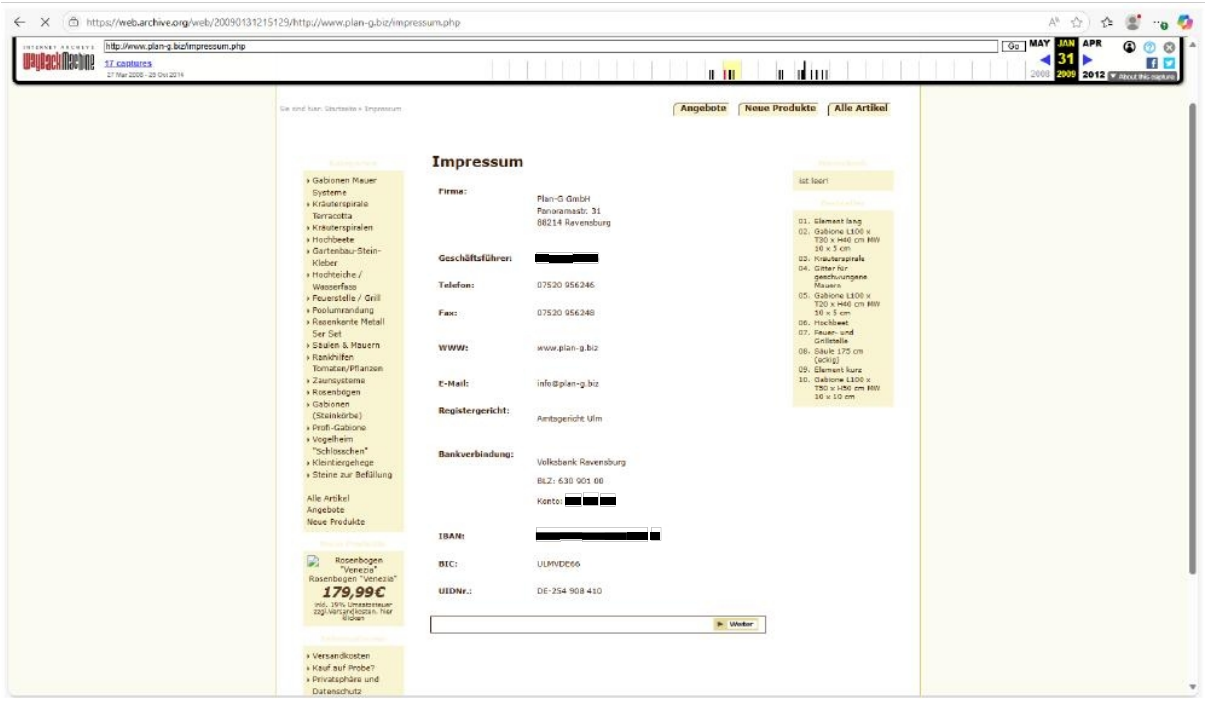

139 The image link for the ‘Metal Lawn Edging, Set of 5’ shown in Annex K 4 [sic!] reads ‘https://web.archive.org/web/20090131215134im_/http://www.plan-g.biz/images/Rasenkante_Beetabgrenzung_Rasenkante_Metallrasenkante_99680.jpg”, whereby the claimant emphasises that the number 99680 at the end of the link refers to the item number (Statement of Claim, p. 8). The claimant submits the image as Annex K10, and it is reproduced below:

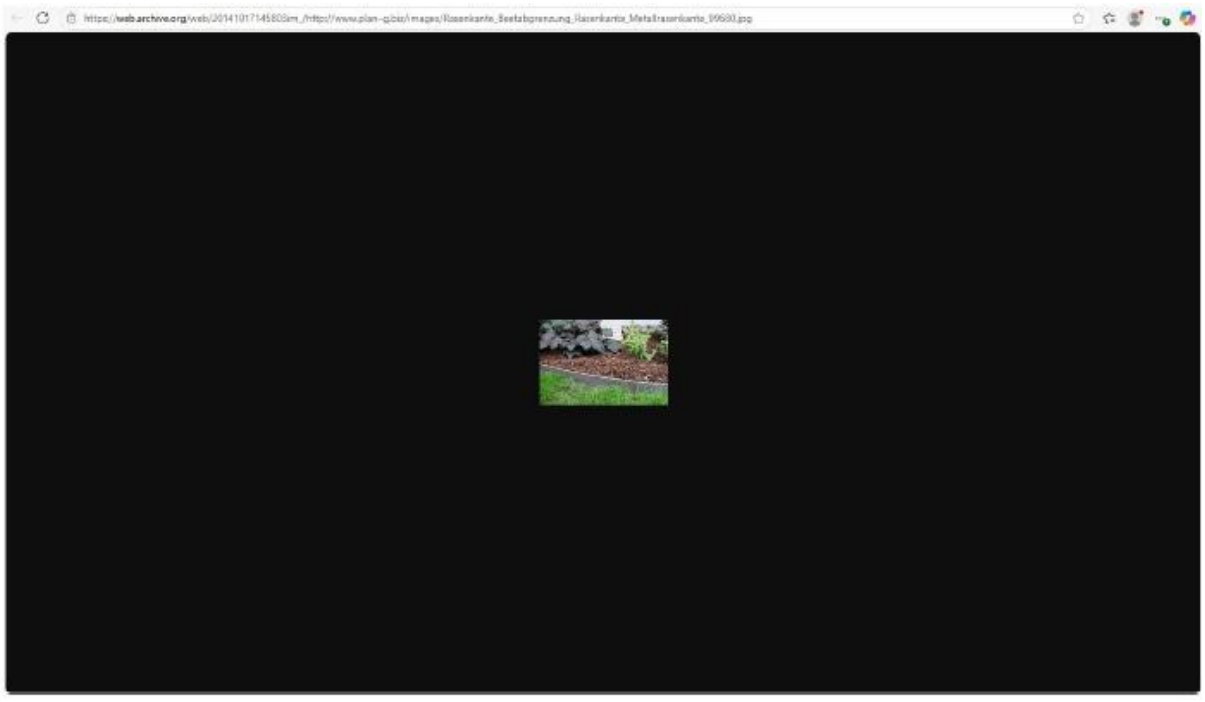

140 The claimant further submits a product catalogue from 2010 and points out that on p. 42, under item number 99680, a lawn edging is shown which bears a very strong resemblance to the image in K7; the other illustrations correspond to Figures 11 and 14 of the patent in suit (Statement of Claim, p. 9). The illustrations referred to are reproduced below:

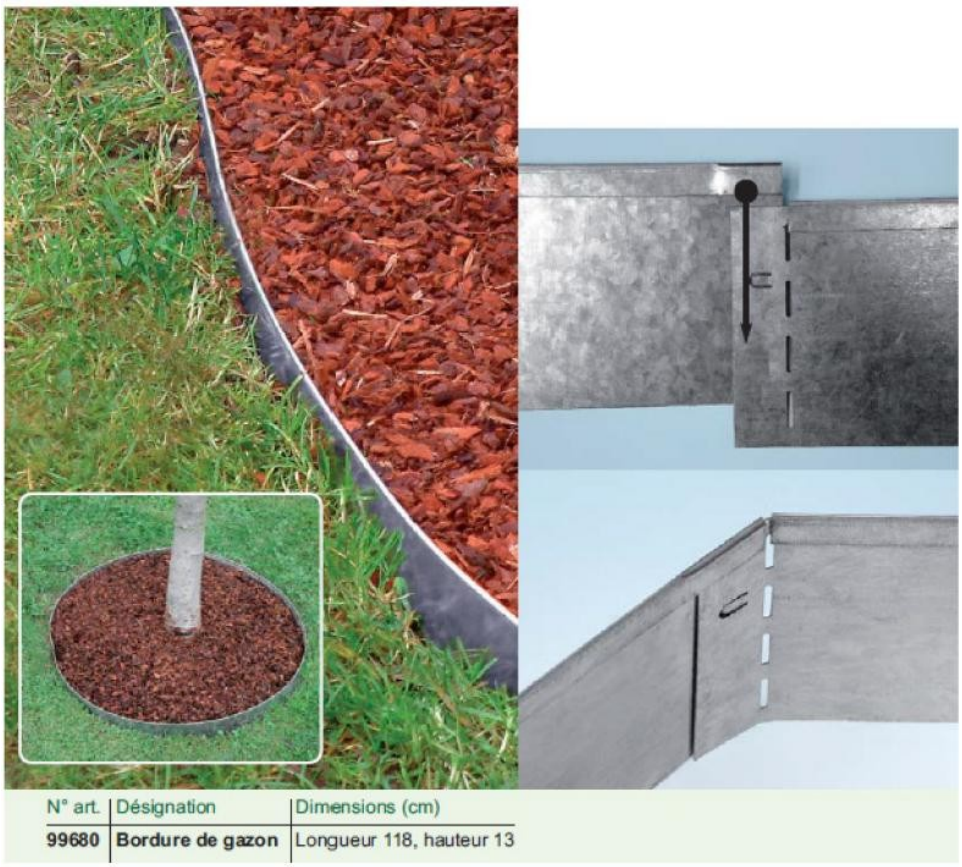

N° art.	Désignation	Dimensions (cm)
99680	**Bordure de gazon**	Longueur 118, hauteur 13

141 With regard to claim 6 as granted, the claimant submits in paragraph 112 of the statement of claim: 'Exhibit K8 expressly states that this is a lawn edging made of bendable sheet metal. According to this, even angles of 90 degrees are possible, which further emphasises its bendability.'

142 (b) According to Article 54(2) EPC, the state of the art comprises everything which, before the filing date of the European patent application, has been made available to the public by means of a written or oral description, by use or in any other way. Prior publication and obvious prior use are two separate concepts. Commercial documents such as quotations may also be considered as prior publication or a written description of the state of the art. The person skilled in the art will regard commercial documents as constituting the state of the art in their own right (UPC_CFI_26/2026 and UPC_CFI_375/2025 (Vienna Regional Court), decision of 19 February 2026, para. 44 – Messerle v Sabert). Since – as already explained above in para. 95 – what is decisive is what the person skilled in the art directly and unambiguously derives from a single document constituting the state of the art, a combination of several commercial

documents cannot, in principle, be taken into account as evidence of a

prior publication prejudicial to novelty. At most, where a cited document expressly refers to a second document, the latter may (in whole or in part) be regarded as forming part of the disclosure of the main cited document. Even different passages within a single document that are rather disparate may only be combined if there is a clear and unambiguous indication suggesting that they should be (UPC_CoA_473/2025 et al., decision of 13 July 2026, para. 152 – Fujifilm v Kodak). The disclosure content of a prior publication must, in principle, be determined on the basis of the priority date.

143 (c) Against this background, the claimant has not, by means of documents K7 to K11, demonstrated any prior publication of the subject-matter of claim 1 of the patent in suit as set out in auxiliary claim 1.

144 aa) Even claim 1 in its granted form is not disclosed.

145 (1) Even if one assumes that the images and descriptions referred to by the claimant in K7, K8 and K10 were available on the internet on 31 January 2009 – that is, prior to the priority date, which the claimant has not contested – it is not apparent from the images and descriptions submitted by the claimant how sheet metal strips of a specific configuration are to be fitted together. In particular, neither a flange nor a tongue nor a receiving slot is visible, as the defendant emphasises (Reply, p. 25). The Chamber concurs with this view.

146 (2) It is undisputed that the product catalogue K11 was published after the priority date of the patent in suit. In so far as it provides further indications as to the configuration of the product advertised therein, it cannot, in itself, be regarded as prior art.

147 The claimant refers to the illustrations shown in the 2010 catalogue K11 for the disclosure of features 1, 2 and 2.1 [feature M1.2] and, in particular, the ability to connect at the front. For the disclosure of features 2.2 [feature M1.3], feature 2.3 [feature M1.4], 2.3.1 [feature M1.5], 2.3.2 [feature M1.6], 2.3.3 and
2.3.4 [feature M1.7], feature 2.3.5 [feature M1.8] and feature 2.3.6 [feature M1.9], the claimant relies solely on the product catalogue K11 in the claim (claim, p. 71 et seq.). For the reasons set out in paragraph 142, a combination of documents is, in principle, not permissible in the novelty examination.

148 There is no exception to this rule in the present case. The Board cannot identify any reference in the sense described above. In particular, it does not regard the item number to which the claimant refers as constituting such a reference.

149 In so far as the claimant – who bears the burden of proof and presentation – asserts that item numbers are stable in practice and demonstrate the continuity of a product as long as no changes are proven (reply, para. 53), which the defendant disputes (counter-reply, p. 23), the claimant has not provided any evidence to support its assertion. The court is not aware of how item numbers are handled in this regard. The dimensions stated in K7 (120 x 12 cm)

and K11 (118 x 13 cm) in any case argue against the products being identical, a point to which the defendant drew attention at the hearing. Furthermore, the Chamber is of the view that the person skilled in the art would not interpret the use of the same item number as a clear and unambiguous indication that products bearing the same item number in other documents are to be regarded as having the same design, even where there is a considerable time gap between the publications, and would therefore not draw conclusions regarding the disclosure of the design in one document from another document. This applies in particular with regard to the subsequently published catalogue K11. Logically, the person skilled in the art was not aware of catalogue K11 at the priority date and could therefore not apply a disclosure from K11 prior to the priority date of the patent in suit to the products shown and described in K7, K8 and K10.

150 (3) In so far as the claimant, in its reply, refers – in addition to the references mentioned in paragraph 147 – to the fact that K10 shows, amongst other things, a tongue (paragraph 63), the Board cannot agree with this. K10 merely shows a (composite) lawn edging in which the plug-in connection is not shown in structural detail and is therefore not directly and unambiguously disclosed. In so far as the claimant refers in its reply to the fact that K7 implies a tongue (with a specific bend in the tongue area) (para. 63), the Board cannot accept this either.

151 Since, therefore, even claim 1 as granted is not prejudicially anticipated by K7 et seq., claim 1 in the version set out in auxiliary claim 1 is novel in relation to K7 et seq.

152 bb) It should therefore be noted, merely by way of supplement, that claim 1, as set out in auxiliary claim
1 and with the addition of a further feature from Annex K7 or K10 is not anticipated.

153 (1) With regard to the prior disclosure of claim 6 as granted, the claimant, as we understand it, refers solely to Annex K7. It is true that, at the relevant point in the statement of claim in paragraph 112, it explicitly refers only to Annex K8. However, Annex K8 does not mention,
“that it is a lawn edging made of bendable sheet metal. According to this, even 90-degree angles are possible, (…)” (see statement of claim, para. 112). K8 is a legal notice and does not refer to the lawn edging any further. Only in the left-hand column, highlighted in yellow, does it state ‘Metal lawn edging, set of 5’, without, however, mentioning any bendability. The Chamber therefore assumes that the claimant is referring to K7.

154 K7, however, does not comment further on the features of claim 6 as granted; in particular, K7 does not mention a tongue, and consequently does not describe a configuration of the tongue such that it is attached to the sheet metal strip in a bendable manner as an extension of the sheet metal strip.

155 (2) The claimant’s argument in its reply (para. 63) that K10 shows a plug-in connection in which the tongue is formed as an extension of the sheet metal strip and is attached in

a bendable manner due to the material properties (thin, galvanised metal) is

to succeed in this respect either. The person skilled in the art cannot discern a plug-in connection from the photograph in Annex K10. Nor can it even be deduced from the photograph that the lawn edging shown has a plug-in connection at all.

156 (d) In so far as the claimant, in its reply, alleges obvious prior use with reference to K7 to K11 (Reply, para. 49 et seq., 61 et seq.), this challenge is equally unsuccessful, irrespective of whether the argument was raised in good time.

157 aa) Prior use may be established if a physical object exhibiting the features protected by the patent was the subject of an offer or an advertising campaign. Such prior use may also be carried out by the applicant. Prior use within the meaning of Article 54 EPC requires use of the technical teaching in a manner that makes it objectively accessible to the public.

158 bb) The claimant has not substantiated prior use.

159 (1) In so far as the claimant refers in the statement of claim to the publication on the internet on 31 January 2009 (K7), the above applies: the features of claim 1 do not follow directly and unambiguously from K7.

160 (2) The claimant's argument that K7 discloses availability from the end of February 2009 – which it claims also includes '26 February' – does not support its case; that the ability to place an order implies public accessibility even prior to actual delivery, and that public advertising makes the product accessible even if delivery takes place later, as the person skilled in the art could derive the technical teaching (Reply, para. 54). As we understand it, the claimant does not allege any actual delivery to the public prior to the priority date, and therefore prior to 25 February 2009. In so far as the claimant takes the view that public advertising renders the product accessible, the above applies: from the public advertising as set out in Annexes K7 to K10, a person skilled in the art cannot directly and unambiguously deduce the subject-matter of claim 1 of the patent in suit. The claimant neither alleges nor substantiates that a product supplied, if at all, prior to the priority date on the basis of the offer in K7 et seq. would anticipate all the features of claim 1 as set out in auxiliary claim 1.

161 4. Claim 1, as set out in auxiliary claim 1, does not lack novelty in relation to D6 (= Annex K13) (see reply, para. 65).

162 The claimant's submissions regarding D6 cannot be taken into account. The claimant only introduced D6 as Annex K13 in its reply (reply, para. 26).

163 (a) A counter-claimant in nullity proceedings must specify the extent to which it is asserting the invalidity of the claimed patent. They must sufficiently substantiate their claim for each patent claim that is the subject of their challenge, Rule 25.1(a)-(d) of the Rules of Procedure (UPC_CoA_473/2025 et al., decision of 13 July 2025, Fujifilm v Kodak – para. 55).

In the Chamber's view, the same applies to the claimant in nullity proceedings under Rule 44(d)-(g) of the Rules of Procedure (corresponding to Rule 25.1(a)-(d)).

164 In the event of an application for amendment of the patent, the reply to the application for amendment does not, according to the case-law of the Court of Appeal, afford the claimant the opportunity to introduce new grounds for the invalidity of the patent *as granted*, such as new prior art, unless an extension of the claim within the meaning of Rule 263 of the Rules of Procedure is permitted. A distinction must therefore be drawn between grounds, facts and evidence referred to in relation to the patent as granted and those referred to in relation to proposed amendments. Owing to the 'front-loaded' system of the EPGÜ, the parties must put forward all their arguments as early as possible, as clarified in Preamble 7 of the Rules of Procedure. Specific new arguments may nevertheless be taken into account in the light of the specific circumstances of the individual case. The rules must be interpreted in the light of the principle of proportionality. In this regard, Rule 44 of the Rules of Procedure, in the English version, requires an 'indication of the facts relied on' [in the French version, 'une indication des faits invoqués'; in German: 'die vorgebrachten Tatsachen']. In the Court of Appeal's view, an unduly strict application is therefore precluded. The Court of Appeal further points out that the principle of fairness may require that the applicant for a declaration of invalidity be permitted to introduce new facts and evidence in response to the reply. This may include evidence intended to substantiate a point already raised in the light of the general knowledge of a person skilled in the art, or to respond to evidence adduced by the defendant on that point (UPC_CoA_71/2025, decision of 29 December 2025, para. 26 et seq. – VMR v NJOY; see also UPC_CoA_622/2025 and 623/2025, final decision of 26 May 2026, para. 79 – Hefei v Grundfos; regarding the latter proceedings at first instance, UPC_CFI_11/2024 (Düsseldorf Regional Court), decision of 8 May 2025, para. 103 with further references – Grundfos v Hefei).

165 Under Rule 263 of the Rules of Procedure, a party may apply for leave to amend the claim, but must state the reasons why the amendment was not already included in the original pleading. The statement of reasons must be such as to enable the court to decide on the admissibility on the basis of Rule 263.2 and Rule 263.3 of the Rules of Procedure (UPC_CFI_11/2024 (Düsseldorf Regional Court), decision of 8 May 2025, para. 105 with further references – Grundfos v Hefei).

166 (b) The claimant has not met these requirements. Whilst the Court may regard the new submissions in the reply as an implied application within the meaning of Rule 263 (see also UPC_CFI_11/2024 (Düsseldorf Regional Court), decision of 8 May 2025, para. 105 – Grundfos v Hefei), it sees no justification as to why the new citations were not already raised with the application. The statement in the reply that 'the defendant's submissions in the rejoinder give rise to citing K13 (…) as a further citation that undermines novelty and/or negates inventive step

[sic]" is not sufficient to constitute a statement of reasons within the meaning of Rule 263.1 of the Rules of Procedure.

167 The claimant's submission at the hearing—that the defendant had, for the first time in its reply, distinguished between general bendability and a specific functional bend, which could not have been foreseen when the action was brought, and that D6 and D8 had therefore been submitted—is equally unsuccessful. To a person skilled in the art, a disinterested reading of claim 6 makes it clear that the claim does not address the general bendability of the edging material. The claimant therefore had reason to interpret and grasp the meaning of claim 6 whilst preparing the action for revocation and to make submissions on this point.

168 The fact that the defendant, in its response, filed a request for amendment of the patent in suit does not, for the reasons set out above and in the light of the clarifications provided by the Court of Appeal in the case of VMR v NJOY, lead to any different conclusion. Rather, the claimant was required to set out comprehensively in the statement of claim not only the main claim as granted, but also the sub-claims as granted, and to assert all relevant grounds for invalidity in the statement of claim. Since auxiliary claim 1 incorporates sub-claim 6 into claim 1 without further additions, any further challenges by the claimant to auxiliary claim 1 in the reply are to be regarded as an extension of the claim within the meaning of Rule 263 of the Rules of Procedure – which, as explained in paragraph 166, is not admissible.

169 Nor, in the light of the parties' submissions, do the principles of proportionality or fairness require that the claimant's new submissions be admitted.

170 5. Claim 1, as set out in auxiliary claim 1, does not lack novelty in relation to D7 (= Annex K14) (see reply, para. 66).

171 The claimant only introduced D7 as Annex K14 in its reply (reply, para. 30). This new submission, which is to be regarded as an extension of the claim within the meaning of Rule 263 of the Rules of Procedure, cannot be taken into account for the reasons set out above in para. 163 et seq.

172 Furthermore, in so far as the claimant additionally argued at the hearing that the defendant had only raised the issue of the conical shape of the slots in D1 in its statement of defence – which had prompted the claimant to conduct further research into vertical interlocking, in the course of which it had found D7 – this argument is equally unsuccessful. For the reasons set out above, the conical shape of the slots is irrelevant. It was to be expected that the defendant would object to an interpretation of D1 according to which D1 discloses vertical insertion.

173 6. Claim 1, as set out in auxiliary claim 1, does not lack novelty in relation to D8 (= Annex K15) (see reply, para. 67).

174 The claimant only introduced D8 as Annex K15 in its reply (reply, para. 30). This new submission, which is to be regarded as an extension of the claim within the meaning of Rule 263 of the Rules of Procedure, cannot be taken into account for the reasons set out above in para. 163 et seq.

IV. Inventive step of claim 1 as set out in auxiliary claim 1

175 1. Claim 1 as set out in auxiliary request 1 involves an inventive step over K7 et seq. in conjunction with common general knowledge.

176 (a) The Court of Appeal has set out the principles governing the assessment of inventive step within the meaning of Article 56 EPC in decision UPC_CoA_335/2023 of 26 February 2024 – Nanostring v 10x Genomics and, in particular, in decisions UPC_CoA_464/2024 – Meril v Edwards and UPC_CoA_528/2024 – Amgen v Sanofi of 25 November 2025.

177 Firstly, it must be determined what the subject-matter of the invention is, i.e. the objective problem. This must be assessed from the perspective of a person skilled in the art, drawing on their general technical knowledge at the time of filing or the priority date of the patent. This must be done by determining what the invention adds to the state of the art, not by considering the individual features of the claim, but by comparing the claim as a whole in conjunction with the description and the drawings, i.e. also taking into account the inventive concept (the technical teaching) underlying the invention, which must be based on the technical effect(s) that the person skilled in the art understands to have been achieved by the claimed invention on the basis of the application.

178 To avoid a retrospective approach, the objective problem must not contain any references to the claimed solution.

179 The claimed solution is obvious if, at the relevant time, the person skilled in the art seeking to solve the objective problem would have arrived at the claimed solution (and not merely could have arrived at it), starting from a realistic starting point in the state of the art in the relevant field of technology.

180 The relevant technical field is the area relevant to the objective problem to be solved, as well as any area in which the same or a similar problem arises and which the person skilled in the art in that specific field can be expected to be familiar with.

181 A starting point is realistic if its teaching would have been of interest to a person skilled in the art seeking to solve the objective problem at the relevant date. This may be the case, for example, where the relevant prior art already discloses several features similar to those of the claimed invention and/or addresses the same or a similar underlying problem to that of the

claimed invention. There may be more than one realistic starting point, and the claimed invention must be inventive when starting from each of these starting points.

182 The person skilled in the art possesses neither inventive ability nor imagination and requires a hint or motivation which, starting from a realistic starting point, prompts them to take the next step towards the claimed invention. As a general rule, a claimed solution is to be regarded as non-inventive/obvious if the person skilled in the art would take the next step on the basis of the hint or as a matter of routine and arrive at the claimed invention.

183 A claimed solution is obvious if the person skilled in the art would have taken the next step in the expectation of finding an intended solution to their technical problem. This is generally the case if the results of the next step were clearly foreseeable or if there was a reasonable prospect of success.

184 The Court of Appeal has clarified that, where the person skilled in the art has no reason to combine a realistic starting point with another document, a reason must not be inferred from the document being combined. Without a reason or motivation to consult a particular document, the person skilled in the art will not take note of its contents (UPC_CoA_473/2025 et al., decision of 13 July 2026, Headnote 6 – Fujifilm v Kodak).

185 The applicant for a declaration of invalidity must set out in detail the reasons why inventive step should be denied. It is not sufficient to merely refer to a large number of documents. Rather, it must be substantiated why a particular prior art document is of interest to the person skilled in the art as a starting point for solving the problem addressed by the invention and, where applicable, why this prior art document is combined with other prior art documents. If a combination with general technical knowledge is claimed, it must be substantiated from what this general technical knowledge derives (UPC_CoA_622/2025 and 623/2025, final decision of 26 May 2026, para. 79 – Hefei v Grundfos).

186 b) Against this background, the challenge is unsuccessful.

187 aa) As set out above, K7 does not merely fail to disclose directly and unambiguously the feature newly added in auxiliary claim 1 (‘wherein the tongue (4) is attached to the sheet metal strip (1) in a flexible manner as an extension of the sheet metal strip’). Rather, further features of claim 1 as granted are not disclosed directly and unambiguously. Since the claimant, in its reference to general technical knowledge, addresses only the newly added feature, its challenge is unsubstantiated due to a lack of arguments regarding the features of the granted claim 1 which are not disclosed in K7, and cannot therefore succeed on that ground alone.

188 bb) Even if K7 were to disclose the features of claim 1 of the patent in suit as granted, the claimant's challenge based on a lack of inventive step would not succeed.

189 (1) The objective problem lies in creating a flowerbed edging from sheet metal strips known in the prior art, such that the sheet metal strips can be fixed or anchored in the ground one after the other, whereby round edgings or geometric angles of 30, 60 or 90 degrees can be formed.

190 (2) The claimant has not demonstrated that the claimed solution was obvious.

191 In so far as the claimant asserts that the mere fact that a person skilled in the art knows that sheet metal strips are always bendable suggests the feature (Statement of Claim, para. 113), this cannot be accepted. Firstly, whilst it is true that a person skilled in the art knows that any sheet metal strip (regardless of thickness) is bendable provided the correct tool for bending is used. However, as explained above in paragraph 129, sub-claim 6 addresses bendability using the means customary for laying garden edging and thus also by hand. The claimant has not explained why such a feature is suggested by general technical knowledge. Secondly, the scope of the newly added feature goes beyond the mere bendability of the sheet metal strip. The claimant does not assert in the statement of claim that the technical knowledge, according to which sheet metal strips can [generally] be bent, implies a specific ability to bend the tongue. Nor is this apparent to the Chamber.

192 The claimant's arguments in the reply do little to further its case either. Contrary to the view expressed therein (para. 63), the Chamber considers that K10 does not disclose a plug connection in which the tongue is formed as an extension of the sheet metal strip and is bendable by virtue of the material properties (thin, galvanised metal). Nor would a person skilled in the art infer this implicitly from the statement in K7 that 'even angles of up to 90 degrees are possible'. It does not follow from the wording in K7, not even implicitly, that the tongue should be bendable at the point where it is attached to the metal strip.

193 2. Claim 1, as set out in auxiliary request 1, is inventive in relation to D1 in combination with general technical knowledge (see reply, para. 68 et seq. regarding auxiliary request 1).

194 a) The challenge is already out of time for the reasons explained above in paragraphs 163 et seq. It was only raised in the reply.

195 b) For the sake of completeness, and without prejudice to the arguments set out in paragraphs 53, 163 et seq., it must be noted that the challenge is also unsuccessful on the merits.

196 aa) As explained previously, the objective problem lies in creating a flowerbed edging from sheet metal strips known in the prior art, such that the sheet metal strips can be fixed or anchored in the ground one after the other, whereby round

edgings or geometric angles of 30, 60 or 90 degrees.

197 bb) The claimed solution is not obvious on the basis of D1.

198 The starting point for the claimant's arguments in its reply is based on a misunderstanding of the disclosure content of D1. The section of one of the metal strips designated as 'tongue 14', which the claimant refers to at this point (and thus deviating from the 'reading grid' it specified during the novelty examination against D1, as set out above in paragraphs 110 and 111; see also the rejoinder, p. 5) as
'tongue' (reply, para. 71), does not engage with the slits (slits 12), as claimed by the claimant. The slits 12 separate the section designated as 'tongue 14' from the remaining sections of the single sheet metal strip. As already explained above regarding the question of the novelty of granted claim 1, in the case of the edging known from D1 – in the form of the bent-over upper longitudinal edge 10 – into which the tongue within the meaning of claim 1 of the patent in suit engages – in the words of D1: the upper section 16, together with the tongue 14 and the lower section 16 – a receiving slot is provided, which is arranged at the opposite connecting end. The claimant therefore does not even explain why it would have been obvious to design the tongue within the meaning of claim 1 of the patent in suit in accordance with the feature newly included in claim 1 pursuant to auxiliary claim 1, but only in relation to a part – which is not relevant here – of the sheet metal strip as per D1. Notwithstanding this, contrary to the claimant's view, the person skilled in the art finds no reason in D1 to design the tongue to be bendable. The fact that D1, by using the phrase 'easily assembled without tools', emphasises a simple, tool-free (and, contrary to the Rejoinder, para. 73, not: flexible) installation does not imply that bendability is obvious (see Rejoinder, para. 73). In the view of the person skilled in the art, the simpler installation referred to in D1 ('easily assembled') simply concerns the possibility of assembling the parts without tools. Nor does the claimant's reference (Reply, para. 73) to a thin material help her case, as the use of a thin material in itself says nothing about its flexibility. Moreover, D1 does not require the use of a thin material. The claimant does not cite any reference in D1 to support its assertion. Rather, the person skilled in the art understands that the strips described in D1 are preferably formed from 'heavy gauge, hot-dip galvanised metal' (col. 2, line 12 et seq.), and thus from a material that is specifically not designed to be thin. The recommended material (heavy gauge material) alone therefore leads the person skilled in the art away from the notion of bendability. In so far as the claimant finally emphasises (reply, para. 73) that it is common technical knowledge that sheet metal strips must be bendable in order to form curves, the court may assume at this point that – provided they are not prefabricated as curves – only bendable materials can form curves. However, the claimant has not demonstrated any reason why a person skilled in the art would design the D1 flowerbed edging to be bendable. In so far as the claimant's argument is intended to suggest that it is common technical knowledge that

sheet metal strips in garden edging must be bendable because they must be capable of forming curves, it has not substantiated this alleged common technical knowledge. In view of all the above, D1 provides no reason to design the flowerbed edging to be bendable in any way. In any event, it provides no reason to specifically design the tongue to be bendable in the configuration set out in claim 6.

199 3. Claim 1, as set out in auxiliary request 1, is inventive in relation to D1 in combination with K7/K11 (see reply, para. 74).

200 a) This challenge to the validity of the patent is out of time for the reasons set out under 2.

201 (b) Nor is the claimant successful on the merits of the case – again, for the sake of completeness and without prejudice to the arguments set out in paragraphs 53, 163 et seq.

202 Contrary to the claimant's assumption, a combination of D1 with K7/K8 does not lead the person skilled in the art to the claimed subject-matter, as K7 does not disclose bendable tongues, and in particular not tongues of the configuration set out in sub-claim 6. Furthermore, the claimant does not explain what reason the person skilled in the art would have to design the subject-matter of the invention disclosed in D1 to be bendable. The claimant's assertion (reply, para. 74) that the person skilled in the art would be motivated to adopt known bending properties in order to improve adaptability leaves open the question of which specific bending properties she is referring to. For the reasons set out in section 2, the person skilled in the art has no reason whatsoever to design the subject-matter of D1 to be flexible. K7/K8, as a combination document, does not provide the person skilled in the art with any such reason for legal reasons (explained in paragraph 187).

203 4. Claim 1, as set out in auxiliary request 1, is inventive over D1 in combination with D6 (see reply, para. 76).

204 The challenge is to be disregarded. The claimant only introduced D6 in the reply as Annex K13 (reply, para. 26). For the reasons set out above, this new submission cannot be taken into account.

205 5. Claim 1, as set out in auxiliary claim 1, is inventive in relation to D7 in combination with D1 (see Rejoinder, para. 77).

206 The challenge is not to be taken into account. The claimant only introduced D7 in the reply (reply, para. 30). For the reasons set out above, this new submission cannot be taken into account.

207 6. For the same reasons, claim 1 as set out in auxiliary claim 1 is inventive in relation to D8 in combination with D1 (see Rejoinder, para. 78). The challenge is not to be taken into account for the reasons set out above.

208 7. Summary

209 In view of the foregoing, claim 1, as set out in auxiliary request 1, is inventive.

D. Costs

210 The decision on costs is based on Articles 69(1) and 69(2) of the EPGÜ. The costs of the proceedings and other costs incurred by the successful party shall, as a rule, be borne by the unsuccessful party, provided that there are no grounds of equity to the contrary, Article 69(1) of the EPGÜ. If a party is only partially successful or if there are exceptional circumstances, the court may order that the costs be apportioned equitably or that the parties bear their own costs, Article 69(2) of the EPGÜ.

211 In the present case, both parties have been partially successful, so it is appropriate for the parties to bear their own costs, Article 69(2) EPGÜ: the claimant has succeeded with its primary claim, whilst the defendant's claim for amendment of the patent in suit has been successful in the first alternative claim. The court costs are therefore to be apportioned between them on grounds of equity.

E. Value of the claim

212 The value of the claim is to be set at 1,500,000 euros.

213 In determining the value of the claim, the court follows the recommendations set out in the Guidelines for the Determination of Court Fees and the Upper Limit for Recoverable Costs. According to these guidelines, the value of an action for revocation, in terms of the recoverable costs of legal representation, is to be determined on the basis of the value of the patent to be declared invalid, paragraph
II.2. In the absence of further information on this point, it may be assumed that the value of a counterclaim for revocation corresponds to the value of the infringement claim plus up to 50 per cent. In the Chamber's view, this also applies in the case of an isolated action for revocation where the patent in suit is the subject of a separately pursued infringement claim.

214 The value in dispute in the parallel proceedings was set at €1,500,000 for both the infringement and nullity actions. In the absence of any information on this matter, the Chamber sees no reason to apply a surcharge to the value in dispute of the present stand-alone nullity action in relation to the infringement action.

ORDER:

I. The action for revocation brought by LS9 GmbH against Bellissa Haas GmbH is dismissed in so far as European Patent 2 222 589 B1, as amended by auxiliary claim 1 (annex to this decision), is upheld with effect for the Federal Republic of Germany, Austria and Luxembourg.

II. The parties shall each bear half of the court fees. In all other respects, the parties shall bear their own costs.

III. The value in dispute is set at 1,500,000 euros.

Issued on 19 August 2026

Presiding Judge Andrea Postiglione	ANDREA POSTIGLIONE Signed digitally by ANDREA POSTIGLIONE ND:email=andrea.postiglione@giustizia.it, c=IT, cn=ANDREA POSTIGLIONE, sn=POSTIGLIONE, givenName=ANDREA, serialNumber=1010313096555939031 8, title=Private Individual Data: 19 August 2026 12:05:44 +02:00
Legally qualified judge and rapporteur Anna-Lena Klein	ANNA-LENA KLEIN Digitally signed by ANNA-LENA KLEIN Date: 19 August 2026 10:45:41 +02'00'
Technically qualified judge Max Tilmann	Digitally signed Tilmann Max Wilhelm 19 August 2026 11:16:08 +0200 Unified Patent Court Einheitliches Patentgericht Juridiction unifiée du brevet
On behalf of the Deputy Registrar:	Digitally signed Marco Ginestro 19 August 2026 11:00:49 +0200 Unified Patent Court Einheitliches Patentgericht Juridiction unifiée du brevet

INFORMATION ON APPEALS

Any party whose claims have been rejected in whole or in part may lodge an appeal against this decision with the Court of Appeal within two months of the decision being served (Art. 73(1) EPGÜ, R. 220.1(a), 224.1(a) VerfO).

INFORMATION ON ENFORCEMENT

A certified copy of the enforceable decision shall be issued by the Assistant Registrar at the request of the party seeking enforcement, Rule 69 of the Rules of Procedure.

INSTRUCTIONS TO THE REGISTRY

A certified copy of the decision should be sent to the European Patent Office and the national patent offices once the decision on invalidity has become final.

8 December 2025

Claims

1 Edging for flowerbeds and grassed areas, consisting of at least two metal strips that can be joined end-to-end, which are connected at least at the top longitudinal side and, in the region of their ends, form connecting ends (2, 3) which are inserted into one another in a mutually overlapping manner, one connecting end being designed as a tongue (4) which engages in a receiving slot (16j) arranged in the opposite connecting end, characterised in that a receiving slot (16j) arranged in the vicinity of one connecting end (3) can be fitted onto the tongue (4) at the other connecting end (2) in a direction perpendicular to the longitudinal extension of the sheet metal strip (6), wherein the tongue (4), as an extension of the sheet metal strip (1) is attached to the sheet metal strip in a foldable manner.

2 A frame according to claim 1,
characterised in that
the tongue (4) consists of a roughly rectangular, unflanged sheet metal strip which continues the wall (6) of the sheet metal strip (1) at a retaining end (2, 3) with the same width (height)

3 A frame according to claim 1 or 2,
characterised in that
the flanged, upper end-side edge *(7) of* the sheet strip (1), which extends over the entire length, extends only as far as just before an end-side clearance (17) and thus forms the adjoining tongue (4j)

4 Edging according to any one of claims 1 to 3, characterised in that a locking tongue (12) is arranged at one end (2, 3) of the stop, which can be pushed out of the plane of the bend in the sheet metal strip (1) and which can be swivelled into a locking opening (11) arranged at the other connecting end (2, 3).

5. A flowerbed edging according to any one of claims 1 to 4, **characterised in that** the removal slot (16›) on the edge side serves as a guide for inserting the serves as a guide for the sheet metal strip.

6. A flowerbed edging according to any one of claims 1 to 5, characterised in that the flexibility of the tongue (4) is provided by notches (5) extending transversely to the wall (6) of the sheet metal strip (1).

7. A flowerbed edging according to any one of claims 1 to 6, characterised in that areas with reduced thickness are provided on the metal strip (1) at the transition to the tongue (4).

8. A flowerbed edging according to any one of claims 1 to 7, **characterised in that** the flanged edge (7, 8, 9) extends over the entire length of the sheet metal strip (1) and is raised in the region of the opposite connection points (3), forming an extended flanged edge (9) as a receiving slot (16).

9. A flowerbed edging according to any one of claims 1 to 8, characterised in that the locking tongue (12) can be formed from the material of the wall (6), in that a recess (J 3) in the wall (6) defines the shape of the locking tongue (12).

10. Beeteinfassung nach einem der Ansprüche 1 bis 9,
dadurch gekennzeichnet, dass
zur Ausbildung einer mit dem Rasenmäher überfahrbaren Rasenkante der Blechstreifen (1) ein sich in Längsrichtung erstreckende Abkantung (14) aufweist.