Unified Patent Court
Einheitliches Patentgericht
Juridiction unifiée du brevet

Hamburg Local
Chamber UPC_CFI
1321/2026

Order

of the Court of First Instance of the Unified Patent Court, Hamburg
Local Chamber
made on 10 August 2026

HEADNOTES

1. The fact that the applicant relies, as its main request, on a set of claims that is narrower than the claims as granted in the patent in suit, namely a combination of Claims 1 and 2 of the patent in suit, does not preclude the ordering of preliminary measures.

2. If, in proceedings concerning interim measures, auxiliary requests are submitted for the first time in the reply brief and relate to the addition of a feature which, in this form, is not the subject matter of a dependent claim, the defendants would have had only a very short period of time to prepare their defence, particularly with regard to the issue of the patent's validity, thereby significantly restricting their ability to defend themselves. Such auxiliary requests shall therefore not be admitted.

HEADNOTES

1. The fact that the applicant is asserting, as its main claim, a claim formulation that is narrower than the granted version of the patent in question – namely, a combination of claims 1 and 2 of the patent in question – does not preclude the ordering of interim measures.

2. If auxiliary claims are raised in summary proceedings only in the reply and concern the addition of a feature which, in this form, is not the subject of a dependent claim, the respondents would have been able to mount a defence, particularly with regard to the question of the validity of the patent, only within a very short period of time, which would significantly restrict their ability to defend themselves. Such auxiliary claims cannot therefore be admitted.

KEYWORDS

narrower claim set than in the granted patent; auxiliary requests in proceedings concerning interim measures

KEYWORDS

narrower set of claims than in the granted patent; auxiliary requests in proceedings for interim measures APPLICANT

Cybex GmbH, Riedingerstraße 18, 95448 Bayreuth, represented by the managing directors Dr Raul Bader, Johannes Schlamminger and Kai Weisskopf

Legal representatives: patent attorneys and solicitors registered with the EPG at the the law firm Meissner Bolte Patentanwälte Rechtsanwälte Partnerschaft mbB, Widenmayerstraße 47, 80538 Munich; case handler: Patent Attorney Tilman Pfrang, LL.M., and Solicitor Dr Wolfgang Götz

RESPONDENTS

1. **NUNA International B.V.**, represented by the management, Groenmarktkade 5 H, 1016 TA, Amsterdam, Netherlands
2. **Allison GmbH**, represented by the managing director Oliver Mecky, Adam-Opel-Straße 21, 67227 Frankenthal, Germany

Legal representatives: solicitors registered with the EPG at the law firm PENTARC Rechtsanwälte PartG mbB; case handled by: Dr Jan Phillip Rektorschek, lawyer, and Tobias Baus, lawyer

PATENT IN DISPUTE

EP 4 242 056

B1 CHAMBER

Hamburg Regional Chamber

PRESIDING JUDGES

The order was issued by Judge Sabine Klepsch, who is qualified to sit in civil and commercial matters, as Chair; Judge Thomas Adocker, who is qualified to sit in civil and commercial matters, as Rapporteur; and Judge Dr Stefan Schilling, who is qualified to sit in civil and commercial matters.

LANGUAGE OF THE PROCEEDINGS

German

SUBJECT MATTER OF THE PROCEEDINGS

Application for interim measures. Rule 206.1 of the Constitutional Court Rules

of Procedure in conjunction with Rule 211.1 of the Constitutional Court Rules

of Procedure. ORAL HEARING

26 June 2026

BRIEF SUMMARY OF THE FACTS

1. The applicant is bringing proceedings against the respondents for infringement of European patent EP 4 242 056 B1 with unitary effect (hereinafter also referred to as the 'patent in suit').

2. The patent in suit was filed on 13 September 2018, claiming the priority of application 20 2017 105 584 U1 dated 14 September 2027. The application was published on 13 September 2023 and the notice of grant was published on 18 March 2026. The patent application arose from international application PCT/EP2018/074695, filed on 13 September 2018 claiming the priority of the German utility model of 14 September 2017 and published as WO 2019/053102 A1. The European application was published on 22 July 2020 as EP 3 681 757 A1 (parent application) with reference to the published WO document. Patent EP 3 681 757 B1 was granted on the basis of the parent application on 5 July 2023. No opposition proceedings are pending. Unitary effect was entered in the Register for Unitary Patent Protection on 9 April 2026, with effect from 18 March 2026. The registered proprietor is the applicant.

3. The patent in question is entitled 'Child seat system comprising a seat element and a base mountable on a motor vehicle seat'.

4. Claim 1, as granted, reads:

> *1. A child seat system comprising at least a first seat element (11a), a second seat element (11b) and a base (10) mountable on a vehicle seat, wherein, when mounted on the base, at least the first seat element (11a) is rotatable relative to the base (10) or a plinth element (13) of the base (10) from a first orientation into a second orientation differing from the first orientation, wherein a corresponding rotation of the second seat element (11b) relative to the base (10) or [Alternative] the base element of the base, whilst mounted on the base, is possible to a limited extent at least in comparison with the rotation of the first seat element (11a), such that, whilst various orientations are possible for the second seat element, not all orientations possible for the first seat element are possible.*

5. Claim 2, as granted, reads:

> *2. A child seat system according to claim 1, wherein the base (10) comprises a rotating element (14), wherein at least the rotating element (14) comprises at least one fastening device (16a–16d) for fastening the first seat element (11a), wherein the rotating element (14) is rotatably mounted on the plinth element (13) in such a way that the rotating element (14), together with the seat element (11), can be rotated relative to the plinth element (13) to change the orientation of the seat element (11a), wherein the seat element (11a) is removable from the base (10).*

6. The claimant is a German manufacturer of prams, child seats and baby carriers.

7. The respondents' business activities focus on the trade and distribution of baby products, in particular child seats and infant car seats. They form part of the Wonderland Group, whose parent company is Wonderland Nurserygoods Co., Ltd., based in Taipei, Taiwan. Wonderland Nurserygoods Co., Ltd. is the manufacturer, in particular, of child seats and infant car seats produced under the 'NUNA' brand.

8. In its application dated 20 April 2026, the applicant initially expressly alleged an infringement of the patent in suit by the 'base curv' child seat system with its six seat elements 'cari next', 'pipa lite', 'pipa next', 'arra flex', 'todl lite' and 'todl next' in accordance with the compatibility list set out below (see statement of claim, para. 139):



9. At the oral hearing, the applicant clarified that it did not object to the ‘todl lite’ embodiment and added the ‘arra next’ embodiment, which, according to the above compatibility overview, is not compatible with the ‘base curv’ base system.

SUBMISSIONS BY THE PARTIES

10. The applicant requests:

I. The respondents are each ordered to

1. to ensure, within the territory of the Kingdom of Belgium and/or the Republic of Bulgaria and/or the Kingdom of Denmark and/or the Federal Republic of Germany and/or the Republic of Estonia and/or the Republic of Finland and/or the French Republic and/or the Italian Republic and/or the Republic of Latvia and/or the Republic of Lithuania and/or the Grand Duchy of Luxembourg and/or the Republic of Malta and/or the Netherlands and/or the Republic of Austria and/or the Portuguese Republic and/or the Republic of Romania and/or the Kingdom of Sweden and/or the Republic of Slovenia,

a) child seat systems comprising at least a first seat element, a second seat element and a base mountable on a vehicle seat, wherein, when mounted on the base, at least the first seat element is rotatable relative to a plinth element of the base from a first orientation into a second orientation differing from the first orientation, whereby a corresponding rotation of the second seat element relative to the base element of the base, whilst mounted on the base, is possible to a limited extent at least in comparison with the rotation of the first seat element, such that, whilst various orientations are possible for the second seat element, not all orientations possible for the first seat element are possible,

wherein the base further comprises a rotary element, the rotary element comprising at least one fastening device for securing the first seat element, the rotary element being rotatably mounted on the plinth element such that the rotary element, together with the first seat element, can be rotated relative to the plinth element to change the orientation of the first seat element, wherein the first seat element is removable from the base,

to offer, place on the market or use, or to import or possess for these purposes,

b) in the alternative to (a) (in the event that, in the course of the summary examination, the court considers the patent in its previous version to have a

probability to be invalid), to grant the application in accordance with the preceding point (a), subject to the proviso that the wording of claim 1 reproduced above, in accordance with the main application, is drafted in accordance with the alternative application deemed by the Chamber to be valid with a high degree of probability (whereby two alternative applications are submitted, designated as Alternative Application 1 and, subordinate to it, as auxiliary claim 2; see the wording in Annex MB 14)

c) in accordance with the written submission of 22 May 2026: the announced auxiliary claims 1 and 2 are further restricted as a precautionary measure, in each case by including the additional feature M.1.5a

'whereby the first seat element can be locked in a forward-facing position and in a rear-facing position (see Annex MB 14a for the wording).

d) to allow auxiliary claims 1 and 2 of 22 May 2026 (para. 263) and, pursuant to Rule 36, to permit the applicant to file a further written submission in response to the rejoinder of 1 June 2026;

2. and, furthermore, to refrain from

a) a first seat element; or a second seat element; or a base mountable on a vehicle seat; or a combination of the first and second seat elements; or a combination of the first seat element and the base; or a combination of the second seat element and the base

to customers within the territory of the Kingdom of Belgium and/or the Republic of Bulgaria and/or the Kingdom of Denmark and/or the Federal Republic of Germany and/or the Republic of Estonia and/or the Republic of Finland and/or the French Republic and/or the Italian Republic and/or the Republic of Latvia and/or the Republic of Lithuania and/or the Grand Duchy of Luxembourg and/or the Republic of Malta and/or the Netherlands and/or the Republic of Austria and/or the Portuguese Republic and/or the Republic of Romania and/or the Kingdom of Sweden and/or the Republic of Slovenia

and/or to supply,

if they are suitable for use in

a child seat system comprising at least a first seat element, a second seat element and a base mountable on a vehicle seat, wherein, when mounted on the base, at least the first seat element is rotatable relative to a plinth element of the base from a first orientation into a second orientation differing from the first orientation, wherein a corresponding

rotation of the second seat element relative to the plinth element of the base, whilst mounted on the base, is possible to a limited extent at least in comparison with the rotation of the first seat element, such that, whilst various orientations are possible for the second seat element, not all orientations possible for the first seat element are possible,

wherein the base further comprises a rotary element, wherein the rotary element comprises at least one fastening device for securing the first seat element, wherein the rotary element is arranged on the plinth element so as to be rotatable, such that the rotary element, together with the first seat element, can be rotated relative to the plinth element to change the orientation of the first seat element, wherein the first seat element is removable from the base

without, when offering the product to customers in the offer and upon delivery, expressly and prominently stating that the first seat element, the second seat element and the base, which can be fitted to a vehicle seat, may not be used together in the child seat system with the aforementioned features without the consent of the applicant as the proprietor of EP 4 242 056 B1

b) in the alternative to (a) (in the event that, in the course of the summary examination, the court should consider it highly probable that the patent in question, in its previous version, is not legally valid) to grant the application set out in point (a) above, subject to the proviso that the wording of claim 1 reproduced above, as set out in the main application, be drafted in accordance with the alternative application which the Chamber considers to be, with a high degree of probability, legally valid,

3. to pay to the court a recurring penalty payment of up to EUR 250,000 for each individual instance of non-compliance with the orders set out in points 1 and 2, which shall be determined (repeatedly, if necessary) by the Hamburg Local Chamber at the applicant's request,

4. to submit to the applicant, within four weeks of service of the order issued in this matter, a written statement supported by appropriate documentation and containing the following information:

(i) the origin and distribution channels of the products referred to in points I.1 and I.2 that have been procured since 18 March 2026 in the specified territories (including the full names and addresses of the legal entities involved);

(ii) the quantities of the products referred to in sections I.1 and I.2 that have been delivered, received or ordered since 18 March 2026 in the specified territories; and

(iii) the identity of all third parties who, since 18 March 2026, have been involved in the manufacture or distribution of the products referred to in sections I.1 and I.2 in the aforementioned territories

(including the full names and addresses of the legal entities involved).

5. to pay a daily penalty of €2,500 to the court for each day on which they fail to comply with the order under 4., which shall be set (repeatedly, if necessary) by the Hamburg Local Chamber at the applicant's request,

II. The respondents are ordered, as jointly and severally liable parties, to reimburse the applicant provisionally for costs amounting to 56,000 euros.

III. The respondents shall bear the costs of the proceedings.

IV. This order is enforceable – subject, where applicable, to the provision of security in the form of a deposit or bank guarantee by the applicant in favour of the respondents.

11. The respondents apply

I. that the application for interim measures be dismissed; in the

alternative,

not to decide on the application for interim measures without an oral hearing;

in the further alternative,

to limit the claim set out in Section I.2 (alleged indirect infringement) by extending the duty to provide information to include supply ('without, in the event of an offer or supply […]');

to permit the respondents to avert the enforcement of the decision by providing security, irrespective of any security provided by the applicant;

further, in the strictest alternative,

to order the provision of security in the amount of at least a double-digit million sum in euros for the enforcement of any interim measure;

II. The written submission of 17 June 2026, together with the claims and grounds for those claims contained therein, is not admissible and is therefore not taken into account;

In the alternative: should the written submission of 17 June 2026 or parts thereof be admitted, the respondents shall be given the opportunity to reply in writing or, at the very least, orally.

FACTUAL AND LEGAL ISSUES IN DISPUTE

12. The claimant alleges a direct and indirect infringement of the scope of the claim asserted by her by the child seat system comprising the 'base curv' base in combination with one of the seat elements – the 'cari next' carrycot and/or the 'pipa lite', 'pipa next', 'arra next', 'arra flex' and 'todl next' child seats. She also alleges an indirect infringement arising from the offering for sale and supply of the aforementioned components, which are intended for use in the child seat system as defined by the patent.

13. In the applicant's view, both the child seat system and the individual components fulfil the necessary features of the asserted claim 2.

14. Furthermore, the validity of the patent in question is sufficiently established. The fact that the applicant is asserting the patent in question on a limited basis as a precautionary measure and is pursuing its claim through two alternative applications does not preclude the application from being well-founded.

15. The interim measures sought are also necessary. This is because, in view of the relevant circumstances of the individual case, the applicant cannot reasonably be expected to wait until a decision is reached in the main proceedings. Likewise, the measures are proportionate. The applicant cannot be accused of acting with undue delay. The patent in question was only granted on 18 March 2026, and the present application was filed on 20 April 2026.

16. The applicant contends that a security for costs is unfounded on its very merits. The system at issue could be modified without any effort so that it no longer infringes the patent in question.

17. The respondents dispute both the existence of an infringement and the validity of the claimed scope of the patent.

18. With regard to the infringement, the respondents in particular dispute that the contested embodiments feature a configuration characterised by the fact that a corresponding rotation of the second seat element (11b) relative to the base element of the base, whilst mounted on the base, is possible to a limited extent at least in comparison with the rotation of the first seat element (11a), in such a way that, whilst various orientations

are possible, but not all the orientations possible with the first seat element. Rather, in contrast to the first seat element – which the applicant regards as the 'todl next' child seat – rotation is not restricted in the child seats 'pipa lite', 'pipa next', 'arra next' and 'arra flex', which are regarded as the second seat element, nor in the 'cari next' carrycot.

19. They further take the view that the patent in question cannot be regarded as valid. It has been inadmissibly extended. In particular, the features highlighted in colour below were not disclosed in the original documents:

	Merkmal lt. geltend gemachtem Hauptantrag
M1.3	wobei eine entsprechende Rotation des zweiten Sitzelementes (11b) gegenüber dem Sockelelement der Basis in einem auf der Basis montierten Zustand zumindest im Vergleich zur Rotation des ersten Sitzelementes (11a) eingeschränkt möglich ist derart, dass beim zweiten Sitzelement zwar verschiedene Ausrichtungen möglich sind, nicht jedoch sämtliche Ausrichtungen, die beim ersten Sitzelement möglich sind
M1.4.2	wobei das Drehelement auf dem Sockelelement rotierbar angeordnet ist derart, dass das Drehelement zusammen mit dem ersten Sitzelement gegenüber dem Sockelelement zur Änderung ~~einer~~ der Ausrichtung des ersten Sitzelementes rotierbar ist,
M1.4.3	wobei das erste Sitzelement von der Basis entfernbar ist.

20. Furthermore, the subject-matter of the patent application is not novel. On the one hand, the 'Matrix Light 2' child seat system, which has been advertised and sold since 2012, and a video relating to it, disclose the subject-matter of the patent application. Secondly, US 2008/0211279 A1 (Annex PEN 6), US 2005 264 064 A1 (Annex MB 17) and JPH 051579 U (Annex MB 13) directly and unambiguously disclose the subject-matter.

21. Furthermore, the subject-matter of the patent application is not inventive when based on US 2005 264 064 A1 (Annex MB 17) in combination with US 2006/0170262 (Annex PEN 12).

22. The balance of interests favours the respondents. Furthermore, the applicant can reasonably be expected to await the outcome of proceedings on the merits; in any event, there is no risk of irreparable harm.

23. Furthermore, there is no urgency in terms of time, as the respondents' products have been on the market for some time and knowledge of the potentially infringing products existed long before the patent was granted. The market has been established for a long time. An injunction would therefore alter the status quo that has existed for years and was established long before the patent was granted (even before the patent application was filed)

.

24. Furthermore, there is no specific urgent interest in the disclosure of information. In particular, the applicant has not demonstrated that waiting until the main proceedings would result in the loss of relevant information.

25. With regard to the application for a penalty payment, the respondents are of the view that, under Article 63 of the EPGÜ, such a payment may only be ordered in the case of final orders. Furthermore, they consider the amount to be unreasonable.

26. The application for reimbursement of costs is unfounded due to a lack of substantive arguments.

27. Furthermore, the respondents contend that, on the basis of Article 62(1) of the EPGÜ, the imposition of a security to avert enforcement—the payment of which would enable them to prevent the enforcement of the interim measures—is justified.

KEY PROCEDURAL STEPS

28. By a written submission dated 20 April 2026, the applicant filed an application with the Hamburg Local Chamber for the ordering of interim measures.

29. Within the time limit for filing an objection subsequently set by the rapporteur, the respondents lodged an objection to the application for interim measures on 13 May 2026.

30. As acknowledged by the rapporteur, the applicant then submitted a reply to the objection on 22 May 2026 within the prescribed time limit, to which the respondents submitted a rejoinder on 1 June 2026, also within the prescribed time limit.

31. The applicant then submitted a further written submission on 17 June 2026, without the Local Chamber having granted permission to do so. The respondents submitted a further reply to this on 23 June 2026, again without the Local Chamber having granted them the opportunity to do so. These written submissions dated 17 June 2026 and 23 June 2026 were rejected by the Local Chamber as inadmissible during the oral hearing on the grounds of late submission.

32. The oral hearing then took place on 26 June 2026.

33. To avoid repetition, reference is made to the entire contents of the file.

GROUNDS FOR THE ORDER

34. The application for interim measures is admissible and, in substance, well-founded.

I. (INTERNATIONAL) JURISDICTION OF THE HAMBURG LOCAL CHAMBER

35. The Hamburg Local Chamber has jurisdiction both internationally and 'within the EPG'.

36. The EPG has international jurisdiction over an infringement action if the European patent asserted by the claimant is in force in at least one contracting member state and the alleged damage may occur in that contracting member state (Art. 31 EPGÜ, Article 7(2) in conjunction with Article 71b(1) of the Brussels Ia Regulation, see the Court of Appeal's order of 3 September 2024 – UPC CoA 188/2024 AYLO/DISH, GRUR-RS 2024, 29446). Where it is alleged that the damage was caused via the internet, the likelihood of such damage may arise from the possibility of purchasing products and/or using services from a website accessible within the territory of the Contracting Member State in which the European patent is in force (EPG Court of Appeal, AYLO v DISH, cited above).

37. Applying these principles to the present case, the Hamburg Local Chamber (International) has jurisdiction.

38. The patent in question is in force in the contracting member states. The contested embodiments are, amongst other places, offered and sold on the internet in Germany.

II. STANDING TO SUE

39. There are no objections to the applicant's standing to bring proceedings. As the registered proprietor of the patent in question, the applicant is entitled to bring proceedings before the court pursuant to Article 47(1) of the European Patent Convention (EPC) in conjunction with Rule 8(5)(a) and (c) of the Rules of Procedure.

III. ADMISSIBILITY OF THE CLAIMS AND THE PROPOSED AMENDMENTS TO THE CLAIMS

40. The amendment to the claims sought by the applicant in its written submission of 22 May 2026 was to be rejected.

41. The fact that the applicant has asserted, as its main claim, a claim wording that is narrower than the granted version of the patent in suit – namely, a combination of claims 1 and 2 of the patent in suit – does not preclude the granting of interim measures. This claim wording

corresponds essentially – though not entirely – to the granted claim 2, whereby one alternative has been deleted and the wording of the additional features of the granted claim 2 has been revised. The assertion of a non-registered version of a claim is not precluded from the outset, even in proceedings for the granting of interim measures excluded (Court of Appeal, Order of 27 March 2026, UPC_CoA_898/2025, para. 39, Onward v Niche).

42. The further amendments to the claims regarding the duty to provide information, including in the event of delivery, and the temporal limitation of the right to information, as set out in the written submission of 22 May 2026, are also admissible without further ado.

43. However, the alternative claims announced in the written submission of 22 May 2026 are inadmissible. During the oral hearing, the applicant's legal representative clarified that the original alternative claims set out in the application were no longer being pursued, but that only the alternative claims in their amended form, as set out in the written submission of 22 May 2026, were being pursued.

44. These alternative claims were dismissed by the Local Chamber at the oral hearing as inadmissible . In principle it is in case case law of the Court of Appeal in 'Onward/Niche' recognised, that also in summary proceedings, ancillary applications may in principle be admissible , i.e. the conditions set out in Rule 263.2 of the Constitutional Court Rules of Procedure may be met. However, in such cases, the summary nature of summary proceedings must always be borne in mind. In this regard, it must always be taken into account whether the legal remedy of the respondent's is the assertion of a version of a claim that has not been granted is unreasonably curtailed.

45. This is the case here and led to the rejection of the new alternative claims at the oral hearing. The further alternative claims were raised in the reply and concern the addition of a feature which, in this form, is not the subject of a dependent claim. The respondents would (have) only been able to mount a defence, particularly with regard to the question of the validity of the patent, within a very short period of time, which significantly restricts their ability to defend themselves.

IV. INFRINGEMENT OF THE PATENT IN SUIT

46. It can be established with sufficient certainty that the claimant's rights are infringed by the offering for sale and distribution of the contested embodiments (Article 25(a) of the EPGÜ).

47. The granting of interim measures pursuant to Article 62(1) of the EPGÜ in conjunction with Rule 211.2 of the Rules of Procedure requires that the court be satisfied with sufficient certainty that the applicant is entitled to bring proceedings, that its rights are being infringed or

is at risk of being infringed, and that the patent in question is valid. 'Sufficient certainty' means a preponderance of probability (EPG-BerG, UPC_CoA_889/2025, order of 27 March 2026, Onward v Niche, para. 71, referring to EPG-BerG, UPC_CoA_335/2023, order of 26 February 2024, NanoString v 10x Genomics; EPG-BerG, UPC_CoA_182/2024, Order of 25 September 2024, Mammut Sports v Ortovox; EPG-BerG, UPC_CoA_297/2024, Order of 3 December 2024, SharkNinja v Dyson; EPG-BerG, UPC_CoA_768/2024, order of 30 April 2025, Insulet v EOFlow; EPG-BerG, UPC_CoA_446/2025, order of 13 August 2025, Boehringer v Zentiva).

48. The question of the validity of the patent and the preponderance of probability in that regard must be assessed not on the basis of the granted version, but on the basis of the limited version claimed (CoA, UPC_CoA_889/2025, Order of 27 March 2026, Onward v Niche, para. 48).

49. In the present case, the application for interim measures is admissible and well-founded with regard to its principal claim. The Local Chamber is satisfied with sufficient certainty (Rule 211(2) of the Rules of Procedure) that, by offering the contested embodiments, the respondents are infringing the applicant's rights under its patent in suit (Article 25(a) of the EPGÜ). The validity of the patent in suit is, with a high degree of probability, sufficiently established in respect of the specific version asserted.

1. Implementation of the features

50. On summary examination, it can be established with sufficient certainty (Rule 211(2) of the Rules of Procedure) that the contested embodiments make direct and indirect use, in accordance with the literal meaning, of the technical teaching of the patent in suit as protected by patent claim 2.

a) Relevant person skilled in the art

51. The relevant person skilled in the art is a university graduate in mechanical engineering who has several years' professional experience in the field of the design of child seat systems.

b) Determination of the scope of protection

52. According to paragraph [0001], the subject-matter of the patent application is a child seat system comprising a first seat element, a second seat element and a base which can be mounted on a vehicle seat.

53. In describing the prior art, the patent application refers in paragraph [0002] of the description to JPH051579U and explains that this discloses a child seat system

in which a seat element can be rotated relative to a base, so that different orientations (in particular a forward-facing or rear-facing orientation) can be set. The child seat system according to this prior art is considered to be in need of improvement in terms of its flexibility.

54. In paragraph [0003], the patent application describes the objective of the invention as proposing a child seat system which is comparatively flexible in its application and, in particular, enables a change in the orientation of a seat element in the most reliable and safe manner possible.

55. To solve this problem, the patent application claims protection for a child seat system having the following features:

M1.1 A child seat system comprising at least a first seat element (11a), a second seat element (11b) and a base (10) mountable on a vehicle seat,

M1.2 wherein, when mounted on the base, at least the first seat element (11a) is rotatable relative to a plinth element (13) of the base (10) from a first orientation into a second orientation differing from the first orientation,

M1.3 wherein a corresponding rotation of the second seat element (11b) relative to the plinth element of the base, whilst mounted on the base, is possible to a limited extent at least in comparison with the rotation of the first seat element (11a), such that, whilst various orientations are possible for the second seat element, not all orientations possible for the first seat element are possible,

M1.4 wherein the base further comprises a rotary element,

M1.4.1 wherein the rotating element comprises at least one fastening device for securing the first seat element,

M1.4.2 wherein the rotating element is rotatably mounted on the plinth element in such a way that the rotating element, together with the first seat element, can be rotated relative to the plinth element to change the orientation of the first seat element,

M1.4.3 wherein the first seat element is removable from the base.

56. Some features of this claim require explanation for their interpretation.

57. In accordance with Article 69 EPC, read in conjunction with the Protocol on its interpretation, the patent claim is not merely the starting point but the decisive basis for determining the scope of protection of a European patent. The interpretation of a patent claim does not depend solely on its exact wording in the linguistic sense. Rather, the description and the drawings must always be taken into account as aids to the interpretation of the patent claim, and not merely to resolve any

ambiguities in the patent claim. However, this does not mean that the patent claim serves merely as a guideline and that its subject-matter also extends to what, following an examination of the description and the drawings, appears to be the patent proprietor's claim to protection. In applying these principles, appropriate protection for the patent proprietor should be combined with sufficient legal certainty for third parties. The patent claim must be interpreted from the perspective of a person skilled in the art. These principles for the interpretation of a patent claim apply equally to the assessment of infringement and the validity of a European patent (Court of Appeal, UPC_CoA_335/2023, Order of 26 February 2024; Court of Appeal, UPC_CoA_1/2024, Order of 13 May 2024; Court of Appeal, UPC_CoA_182/2024, Order of 25 September 2024).

58. A person skilled in the art always interprets a feature of a patent claim in the light of the claim as a whole (see Court of Appeal, UPC_CoA_768/2024, order of 30 April 2025). From the function of the individual feature within the context of the patent claim as a whole, the person skilled in the art will deduce the technical function of the feature, both individually and in its entirety. With regard to the terminology used in a patent specification, this may lead the person skilled in the art to attribute a meaning to a term that differs from its general linguistic usage. The patent specification may define terms independently and, in this respect, constitutes its own glossary (Munich Local Chamber, UPC_CFI_248/2024, decision of 22 August 2025; Munich Central Chamber, UPC_CFI_1/2023, decision of 16 July 2024; Paris Central Chamber, UPC_CFI_309/2023, decision of 5 November 2024).

59. Feature M1.1 provides *for a child seat system comprising at least a first seat element (11a), a second seat element (11b) and a base (10) that can be mounted on a vehicle seat.*

60. The very wording of feature M.1.1, 'mountable **on** a vehicle seat', makes it clear that this provides protection for devices that can actually be mounted on a vehicle seat. This makes it clear that this does not encompass embodiments that are integrated into the vehicle seat. This follows directly from the use of the word 'on'. This interpretation is confirmed in paragraph [0023] of the patent application, according to which the base element as claimed is 'in contact' with the vehicle seat when the base is in its mounted state. This precludes the base element or the base itself from being an integral part of the vehicle seat.

61. Feature M1.2 provides that *'at least the first seat element (11a), when mounted on the base, is rotatable relative to a base element (13) of the base (10) from a first orientation to a second orientation differing from the first orientation':*

62. ‘Orientation’ here refers to a fixed position of the seat element. Only in a fixed position is it possible for a child to use a seat element safely – which is, after all, the purpose of the patented system. However, the respective orientation does not necessarily have to be lockable in the sense of preventing any change in orientation. This follows in particular from the fact that sub-claim 11 explicitly protects the first and/or second seat element being lockable in at least or exactly two different orientations. It must, however, be a fixed position.

63. This is further supported by paragraph [0039] of the patent application, where, in distinction to the ability to lock in place, it is stated (emphasis added):

> *‘Alternatively or additionally, the first and/or second seat element, including, where applicable, rotary element, be lockable in at least or exactly two different orientations, in particular in such a way that the locking can be released (exclusively) by rotation of the first or second seat element and/or the rotary element”*

and by paragraph [0040] (emphasis added):

> *“In general, locking is to be achieved by the interlocking of devices (elements) which are preferably rigidly connected to the element (base, in particular the plinth and/or swivel element, or seat element) on which they are arranged. Fixing may, in particular, be achieved by means of a combination of a projection and a corresponding recess/opening, whereby the projection may be provided on the base, in particular the plinth element, and the recess on the seat element or swivel element (or vice versa). Preferably, in this sense, intermediate orientations (angularly between the forward and rearward orientations, but not exactly comprising the forward or rearward orientation) can be defined, in particular orientations at a 90° angle to the forward or rearward orientation, in particular in both lateral directions.”*

64. The passages [0011] to [0014] of the description discussed by the parties do not contradict the aforementioned interpretation:

[0011] Unter einer "Ausrichtung" ist im vorliegenden Zusammenhang die Ausrichtung des Sitzelementes in Bezug auf die Fahrzeugrichtung bzw. die Blickrichtung des Kindes zu verstehen. In einer Ausrichtung nach vorne blickt das Kind nach vorne, in Fahrtrichtung. In einer Ausrichtung nach hinten blickt das Kind nach hinten, Richtung Rückenlehne (eines Fahrzeugsitzes, auf dem die Basis montiert ist). Eine Achse für eine Änderung der Ausrichtung ist insbesondere, zumindest im Wesentlichen, senkrecht.

[0012] Das jeweilige Sitzelement ist vorzugsweise von einer ersten Ausrichtung in eine zweite Ausrichtung rotierbar. Dies bedeutet insbesondere, dass das Sitzelement bei der Änderung der Ausrichtung grundsätzlich auf der Basis bzw. dem Sockelelement verbleibt (die Basis bzw. das Sockelelement also dabei zumindest kontaktiert). Insbesondere ist eine derartige Rotation ohne gleichzeitige Translationsbewegung (des Sitzelementes relativ gegenüber der Basis bzw. dem Sockelelement) ermöglicht. Ein Entfernen des Sitzes von der Basis bzw. dem Sockelelement zur Durchführung der Rotation ist nicht (zwingend) notwendig.

[0013] Insbesondere kann zwischen erster und zweiter Ausrichtung eine Zwischenposition durch Verdrehen (bzw. Rotation) eingenommen werden.

[0014] Es kann also ggf. ein Winkelbereich kontinuierlich durchlaufen werden. Gegebenenfalls kann in Ergänzung zu einem Ausrichtungswechsel (also einer Rotation um eine zumindest im Wesentlichen vertikale Achse) eine Neigung des Sitzelementes verstellt werden (was ebenfalls in gewissem Sinne einer Rotation entspricht, im Nachfolgenden wird für diese Bewegung jedoch der Begriff "Neigung" bzw. "Neigungsänderung" verwendet werden). Eine Achse für den Ausrichtungswechsel ist nicht identisch mit einer Achse für die Neigung (oder auch Verkippung). Die Achse für den Ausrichtungswechsel ist insbesondere (zumindest im Wesentlichen) senkrecht. Die Achse für die Neigung (also Verkippung) ist eine (in Einbaulage des Sitzelementes) zumindest im Wesentlichen horizontale Achse. Die Neigung betrifft also eine Schrägstellung oder Verkippung des Sitzes, beispielsweise das Überführen des Sitzelementes von einer Ruheposition (Liegeposition) in eine Sitzposition (oder auch umgekehrt).

65. For it cannot be inferred from these that an orientation providing for a fixed position must always result in the ability to lock into place.

66. The respondents are correct in stating that the finding that an angular range can be traversed continuously refers to the 'intermediate position achieved by twisting (or rotation)' in paragraph [0013] above, and thus to the rotational capability of the seat element in question. Rotation involves moving continuously through an angular range – this must, however, be distinguished from 'orientation'. Paragraph [0011] clearly states that this refers to the orientation of the seat element in relation to the direction of the vehicle or the child's line of sight.

67. Paragraph [0014] also refers to a 'change of orientation'. This is defined as a 'rotation about an axis that is at least substantially vertical'. Such a change of orientation would have no technical or functional significance if 'orientation' did not refer to a fixed position, as it is only in such a position that a child can safely use a seat element.

68. Feature M1.3 states that *a corresponding rotation of the second seat element (11b) relative to the base element of the base, whilst mounted on the base, is possible to a limited extent at least in comparison with the rotation of the first seat element (11a), such that, whilst various orientations are possible for the second seat element, not all orientations possible for the first seat element are possible.*

69. Given the wording in feature M1.3, 'not in all orientations possible for the first seat element', the teaching of the patent application is directed towards providing a 'overlap' with regard to the orientations of the first and second seat elements. This is because the wording is intended to ensure that not all orientations of the first seat element are possible for the second seat element. This is also confirmed by the link between rotation and assembly in paragraph [0016]. In particular,

a reference to the feature of restricted rotation in relation to the ability to be mounted in the relevant orientations, as argued by the respondents, is justified, since this is what the description in paragraph [0016] relies on when describing the restricted rotation:

[0016] Das Kindersitzsystem gemäß dem Anspruch 1 verbessert die Flexibilität für den Benutzer des Kindersitzsystems, wobei gleichzeitig Sicherheitsaspekte nicht vernachlässigt werden. Insbesondere kann durch die Einschränkung der Rotation des zweiten Sitzelementes verhindert werden, dass dieses auf unerwünschte Art und Weise (beispielsweise in Vorwärts-Ausrichtung bei einem Sitzelement für ein vergleichsweise kleines Kind oder Baby) eingenommen wird. Unter einer Verhinderung der Rotation des zweiten Sitzelementes ist zu verstehen, dass dieses Sitzelement nur in einer (einzigen) Ausrichtung auf der Basis montiert werden kann. Unter einer Einschränkung der Rotation (im Vergleich zum ersten Sitzelement) ist zu verstehen, dass das zweite Sitzelement zwar in verschiedenen Ausrichtungen auf der Basis montiert werden kann (beispielsweise in Rückwärts-Ausrichtung und in einer Ausrichtung zumindest annähernd dem 90°-Winkel dazu), nicht jedoch in sämtlichen Ausrichtungen, die beim ersten Sitzelement möglich sind (wobei das erste Sitzelement dann beispielsweise in Rückwärts-Ausrichtung und Vorwärts-Ausrichtung und ggf. einer Ausrichtung etwa senkrecht dazu konfiguriert sein kann). In einer konkreten Ausführungsform ist also beispielsweise das erste Sitzelement sowohl in Vorwärts- als auch in Rückwärts-Ausrichtung montierbar, das zweite Sitzelement jedoch zumindest nicht in Vorwärts-Ausrichtung.

c) Implementation of the feature

70. The Court is satisfied, with the requisite degree of certainty, that the contested embodiments infringe the claimed patent.

Direct infringement

71. The claimant clarified at the oral hearing that the ‘base system’ ‘base curv’ and, in combination with this, the ‘cari next’ carrycot and the child seats ‘pipa lite’, ‘pipa next’, ‘arra next’, ‘arra flex’ and ‘todl next’ are the subject of the infringement claim. As clarified by the claimant during the oral hearing, no claim of infringement is being made in respect of the child seat ‘todl lite’, which, according to the compatibility overview, is compatible with the ‘base curv’ base system.

72. A compatibility overview provided by the applicant shows the following compatibilities of seat elements with the ‘base curv’ base system:



73. However, the “arra next” child seat, which the claimant alleges infringes the patent, is not compatible with the “base curv” base system according to the compatibility overview shown above, the accuracy of which the court sees no reason to doubt. For this reason, there are no grounds to suggest that the ‘arra next’ child seat, when used in conjunction with the ‘base curv’ base system, infringes the patent.

74. The ‘todl next’ child seat constitutes the first seating element, whilst the other child seats and the ‘cari next’ carrycot constitute the second seating element. This system makes direct use of the teaching of the patent in suit, as can be seen from the photographs below.

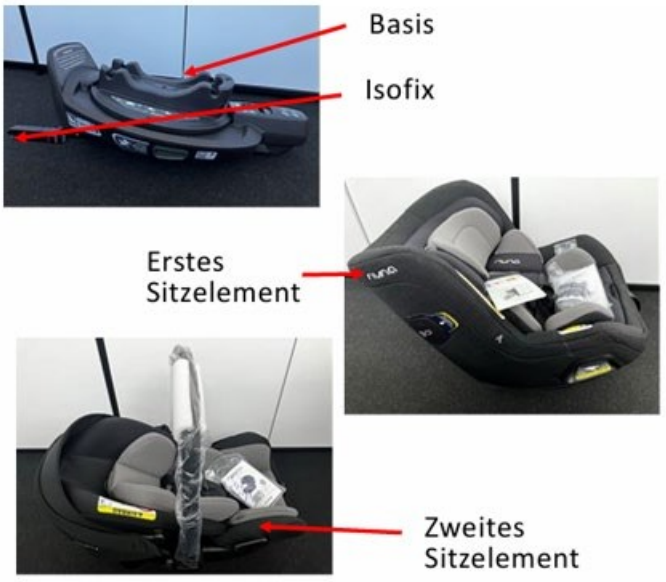

75. The first seating element (‘todl next’) can be rotated from a first orientation (here: rearward orientation, below: top photo) to a second orientation (here:

forward-facing orientation, hereinafter: bottom photo), whilst mounted on the base, together with a swivel element of the base, relative to a plinth element of the base. To do this, the Swivel-Lock rotation lock must be set to 15M+ (i.e. disengaged); in this case, both the rear-facing and forward-facing orientations are possible for the first seat unit ‘todl next’:







76. The rotation of the second seat element, even when mounted on the base, is only possible to a limited extent compared with the rotation of the first seat element.

77. As can be seen from the illustrations below and as confirmed by the court's inspection, this is the case for the various child seats on offer (the 'cari next' carrycot is discussed separately below). The illustrations below relate to the 'arra flex' child seat; according to the applicant's uncontested statements, which the court has therefore taken as a basis, the situation is identical for the 'pipa lite' and 'pipa next' child seats.

78. The second seat units of the 'arra flex', 'pipa lite' and 'pipa next' can be rotated between a rear-facing position (locked) and a side-facing position (unlocked), but cannot be moved into a forward-facing position; however, the first seat unit ('todl next') can be placed in a forward-facing position (with the rotation lock disengaged). The photo below shows the maximum possible rotation of the second seat element. The locking mechanism is located between the rotating element (specifically: the swivel plate) and the base element of the base and is not visible from the outside.



79. The same applies to the ‘cari next’ carrycot: to rotate the carrycot from the locked rear-facing position into a side-facing position, a so-called ‘infant carrier rotation knob’ (see MB 19, page 36, reference number 19) must be operated (see the following extract from MB 19, page 36).

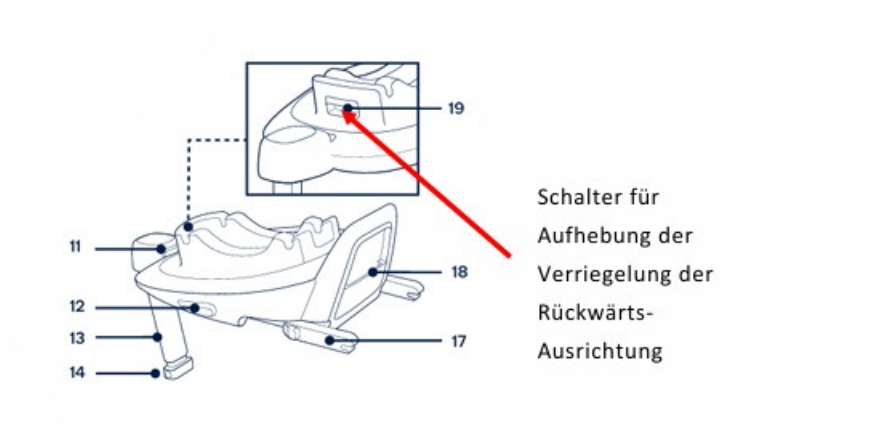

80. When the ‘baby carrier rotation knob’ is operated, a rear-facing position is possible with the ‘cari next’ carrycot, but not a forward-facing position.

81. As can be seen below and as confirmed by the court’s inspection, the base of the ‘base curv’ base system features a rotating element (highlighted in red in the photograph below) which can rotate relative to a base element of the base (= the fixed part of the base; not highlighted in red).



82. As shown in the illustration below and as confirmed by the court’s inspection, the above-mentioned rotating element has at least one (specifically: four) fastening device(s). Each fastening device comprises a recess in which a hook is pivotally mounted:

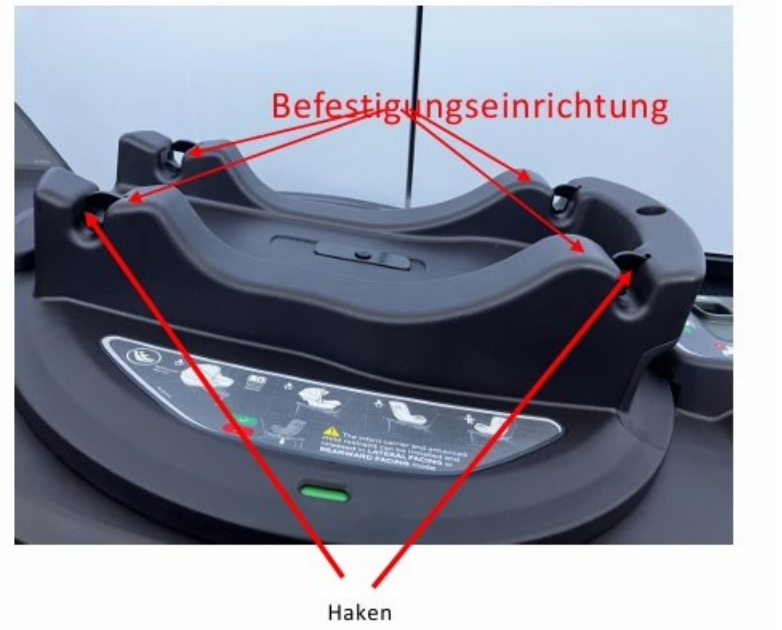

83. As shown in the figures below, rods from the first seat element ('todl next') can be inserted into the recesses visible in the figure above, whereby the rods are then held in place by the hooks.

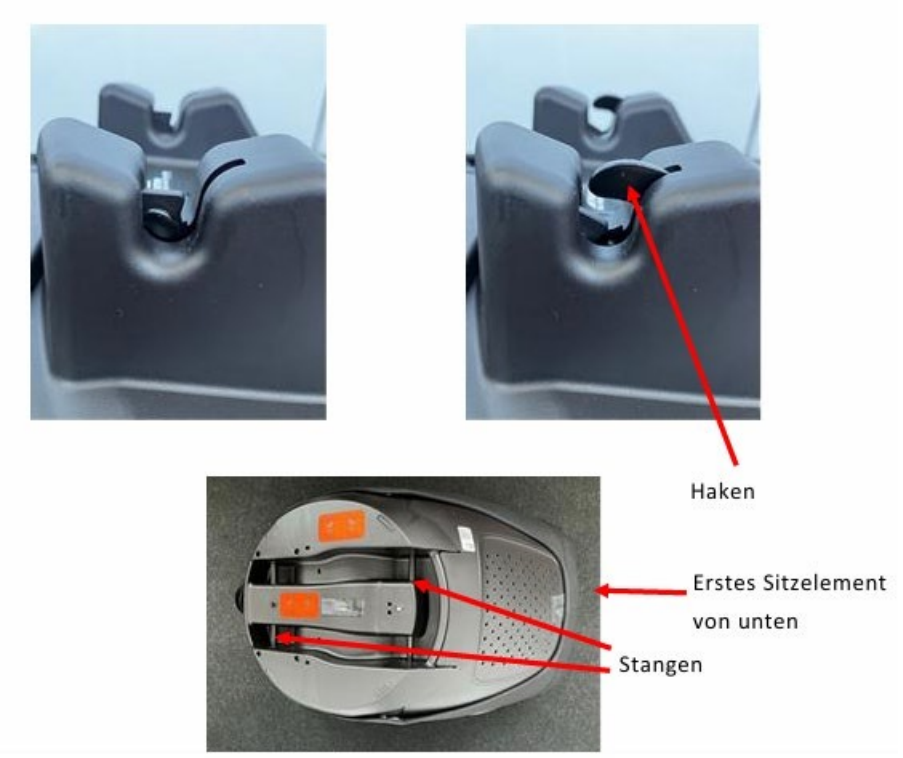

84. Once the first seat element is positioned on the rotating element, it is, as confirmed by the court's inspection, capable of rotating together with the latter relative to the base element.

85. Both the first and the (respective) second seat elements can also be removed from the base, as shown in the following photograph of the base without a seat element and as confirmed by the court's inspection:



86. To remove them, a so-called 'child restraint system release button 12' (see MB 19, page 36 and, in particular, the following extract therefrom) can be pressed.

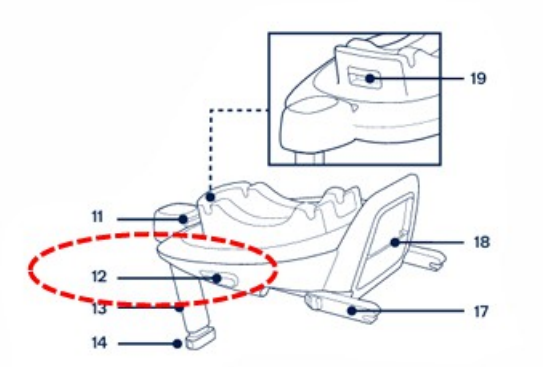

87. Accordingly, it can be established with reasonable certainty that there is a direct patent infringement through the offering and distribution of the child seat system consisting of the 'base curv' base system in combination with one of the following seat elements: the 'cari next' carrycot and the 'pipa lite', 'pipa next', 'arra flex' and 'todl next' child seats.

Indirect patent infringement:

88. There is also an indirect patent infringement arising from the offering and/or supply of the individual components. The indirect patent infringement arises from the offering and supply of components intended for the realisation of the child seat system as defined by the patent, namely

- a first seat element (the 'todl next' child seat)
- a second seat element (the 'cari next' carrycot, the 'pipa lite', 'pipa next' and 'arra flex' child seats)
- a base that can be fitted to a vehicle seat (base system 'base curv')
- a combination of the first and second seat elements

- a combination of the first seat element and the base
- a combination of the second seat unit and the base

89. The websites referred to in Annex MB2 make it clear that individual components of the child seat system can also be purchased separately.

90. The components are ‘means’ within the meaning of Article 26 of the EPGÜ. The means are objectively capable of forming a child seat system when combined, and, in particular, when combined as intended, they enable:

- the rotation of the first seat element relative to the base element,
- the limited rotation of the second seat element relative to the first seat element, and
- the creation of a rotating element which, together with the seat element, can rotate relative to the base element.

91. The components are functionally designed to realise the overall device claimed in the patent through their interaction. It is apparent from the websites set out in Annex MB2 that the seat elements and the base are central components of the claimed child seat system and contribute directly to the realisation of the rotational and fastening mechanisms as defined in the claims. The contested means (components) therefore relate to essential elements of the invention, meaning that this requirement for indirect patent infringement is also fulfilled.

92. As shown in Annex MB 24 regarding the test purchase carried out, the respondents offer the contested means within the territorial scope of the patent with uniform effect and also supply them to persons resident there. The required dual territorial connection is thus established.

93. The test purchase, as documented in Annex MB 24, shows that the contested means are offered and supplied to customers who are not authorised to use the invention. Insofar as these are private end-users, this does not preclude the assumption of indirect patent infringement, as they are not deemed to be authorised to use the invention pursuant to Article 26(3) of the EPGÜ.

94. From the specific design and intended purpose of the contested means, and from the fact that they are specifically offered for combination to form a child seat system, it is evident that the respondents know, or at least ought to have known, that the contested means are suitable and intended for use in implementing the patented invention.

95. All the requirements for indirect patent infringement are therefore met.

96. As shown in the claimant's compatibility overview, which is reproduced below,



all the seat elements in question are also compatible with a base system other than the one at issue here, the 'base next'. They can therefore be used even without the 'base curv' base system – quite apart from the fact that the seat elements can also be used entirely without a base system, for example as a seat element in a pushchair.

V. LEGAL VALIDITY

97. The legal validity of the patent in question is sufficiently established.

98. In the present case, a claim formulation that is narrower than the granted version of the patent in suit – namely, a combination of claims 1 and 2 of the patent in suit – is being asserted. This version of the claim essentially – though not entirely – corresponds to the granted claim 2, whereby one alternative has been deleted and the wording of the additional features of the granted claim 2 has been revised. As the claim was not granted in this form and was therefore not examined during the grant procedure, there is no prima facie presumption of validity. The court must be able to satisfy itself with sufficient certainty that the is valid. A sufficient degree of certainty is lacking if, after weighing up the probabilities, the court concludes that it is more likely than not that the asserted version of the claim is invalid (Düsseldorf Local Chamber, Order of 12 February 2026, UPC_CFI_723/2025 – Align v Angelalign).

99. The by the defendants raised objections do not to cast doubt on the legal validity of the version of the claim asserted.

1. Novelty

100. Under Article 54(1) EPC, an invention is considered to be new if it does not form part of the prior art. The decisive factor is whether the subject-matter of the patent application, with all its features, is directly and unambiguously disclosed in the prior art.

101. The assessment of novelty within the meaning of Article 54(1) EPC requires an examination of the entire content of the prior art publication. However, the content of a prior art document must not be regarded as a reservoir from which individual features may be selected in order to assemble a specific embodiment. Rather, different passages of a document may only be combined with one another if a clear and unambiguous technical teaching to that effect is apparent from the document.

102. A feature may also be implicitly disclosed. This presupposes, however, that the person skilled in the art objectively regards that feature as necessarily contained in the explicitly disclosed teaching, i.e. that it is a clear and unambiguous consequence of what is expressly mentioned and must therefore be regarded as part of the content of the disclosure. Findings which the person skilled in the art only arrives at as a result of further consideration, on the other hand, cannot be regarded as a direct and unambiguous disclosure (see Court of Appeal, UPC_CoA_182/2024, Order of 25 September 2024, Mammut v Ortovox; UPC_CoA_312/2025 et al., decision of 2 June 2026, Kodak v Fujifilm).

103. These principles apply mutatis mutandis to the state of the art within the meaning of Article 54
(3) EPC.

104. The respondents raise four separate novelty objections. One relates to the ‘Matrix Light 2’ child seat system, which, according to the respondents, also constitutes prior use that is obvious to a person skilled in the art. The other challenges to novelty concern US 2008/0211279 A1 (Annex PEN 6), the aforementioned US 064 (Annex MB 17), and the publication JPH 051579 U (Annex MB 13).

a) Novelty vis-à-vis ‘Matrix Light 2’

105. The alleged prior public use of ‘Matrix Light 2’ does not render the teaching of the patent application non-novel.

106. The respondents argue that the ‘Matrix Light 2’ child seat system manufactured by Jané had been publicly used long before the priority date.

A video about this system was published as early as 29 May 2012. The 'Matrix Light 2' child seat system anticipates the claimed version of the claims in a manner that is detrimental to novelty.

107. This argument cannot be accepted. There is already a lack of a direct and unambiguous disclosure of feature M1.1. This child seat system does not comprise two different seat elements, but only a single 'Matrix Light 2' seat element which allows for various configurations and recline settings. Not a single one of the documents submitted indicates that the 'Matrix Light 2' child seat system was advertised, offered or marketed with more than one seat element. The entire system is based on a single seat element, as is made clear by Annexes PEN 7 to PEN 9c. These annexes (user manuals and videos) relate exclusively to use with a single seat element. Exhibits PEN 10 (report on the ADAC test) and PEN 11 (a blog written in French, which is not operated by the respondents and is not associated with them) are irrelevant for the simple reason that the information contained therein does not originate from the respondents. That aside, one might at most see in PEN 10 and PEN 11 an indication that the system can also be operated with more than one seat unit – but no obvious prior use can be inferred from this.

108. There is no reason to interpret one and the same seat element as two separate seat elements, even if it allows for different configurations and recline settings. This is particularly true in light of paragraph [0027] of the description of the patent application, which states:

> *'The child seat system may comprise at least two different seat elements, in particular the first seat element mentioned above and the second seat element mentioned above, each of which can be mounted on the base (and, in particular, removed from the base). The seat elements differ, in particular, with regard to the permissible maximum size and/or minimum size of the child to be accommodated.'*

b) Novelty vis-à-vis US 2008/0211279 A1 ('US 279', Annex PEN 6)

109. Nor does US 279 call into question the novelty of the teaching of the patent application.

110. US 279 was granted on 4 September 2008. It discloses a child seat system comprising a seat element and a base, which, however, is not mounted on the vehicle seat. Rather, the base is mounted on the rear of the (folded-down) backrest of the vehicle seat, as is made particularly clear in paragraphs [0016], [0017] and [0027] (emphasis added):

0016. The present invention relates to a car baby seat system, which comprises: (a) a baby seat; (b) a supporting device for the baby seat; (c) ***a positioning mechanism*** *associated with said supporting device and baby seat,* ***for moving the supporting device and baby seat transversely along the rear passenger seat*** *between at least three states: a safe centre-car state, a side-car state, and a loading/unloading state; wherein, in the loading/unloading state, the baby seat is positioned by said mechanism at least partially outside the car in a rotated orientation relative to the normal orientation of use, thereby facilitating the loading and unloading of the baby and providing additional space for rotation.*

0026. Preferably, the movable base portion is connected to, and moves along, rails.

0027. Preferably, the stationary portion of the multi-part base is positioned on top of the rear surface of a side portion of the backrest of the passenger seat.

111. Similarly, paragraph [0097] describes:

"The baby seat system is mounted on the rear surface 7 of portion 2 of the backrest of the rear passenger seat, as shown"

and is illustrated in Figure 2:

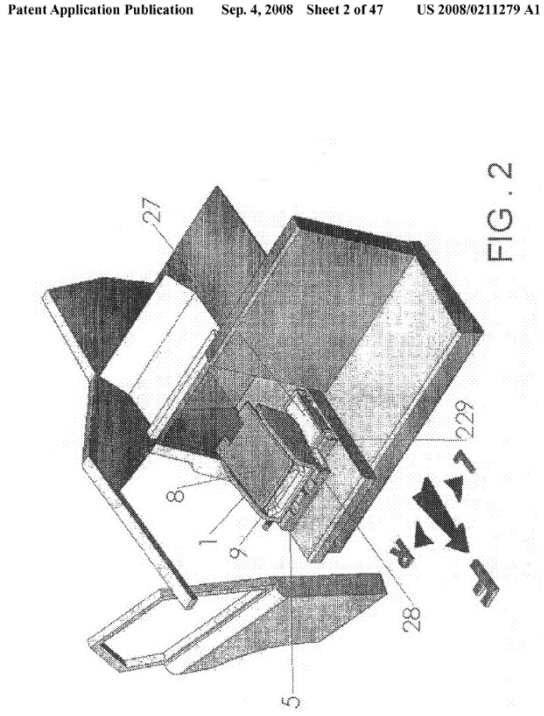

112. In the embodiments shown in Figures 26–35, the base is integrated into a backrest of the

vehicle seat, whereas in the embodiment shown in Figures 36–44 it is attached to an elongated plate 825 in the boot (see US 279, paragraph [0134]).

113. Feature M1.1 is not disclosed by US 279. This is because US 279 discloses only embodiments in which the respective base is not mounted on the vehicle seat, but is either integrated into a backrest of the vehicle seat or mounted in the boot. Feature M.1.1, 'mountable **on** a vehicle seat', does not encompass integrated variants, nor does it encompass variants mounted in the boot.

114. Nor can anything to the contrary be inferred from Figures 14 to 25 or from paragraphs [0115] and [0097]. This is because a key part of the disclosure of US 279 is the attachment of a base to folded-down seats, with the associated possibility of transverse displacement. The same follows from the reference to the prior art cited therein, namely JPH051579U.

c) Novelty vis-à-vis US 2005 264 064 A1 ('US 064', Annex MB 17):

115. Nor does US 064, according to the teaching of the patent application, preclude novelty.

116. US 064 discloses a modular child seat system comprising a base and several interchangeable seats for different stages of the child's development, in particular an Infant Seat 110 and a Toddler or Convertible Seat 120, each of which can be engaged with the same base 100, as is apparent from Figure 1 and paragraphs [0007], [0039] and [0041]. US 064 further discloses that a seat connected to the base is rotatable relative to the base when mounted (see [0009], [0040], [0045] to [0049] and [0069]).

117. This is also shown in Figures 1 and 4, which are reproduced below:

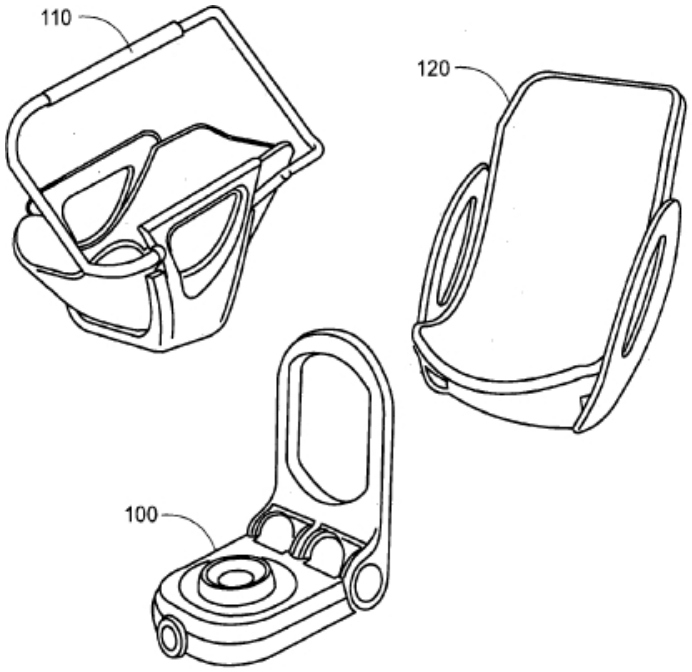

FIG. 1

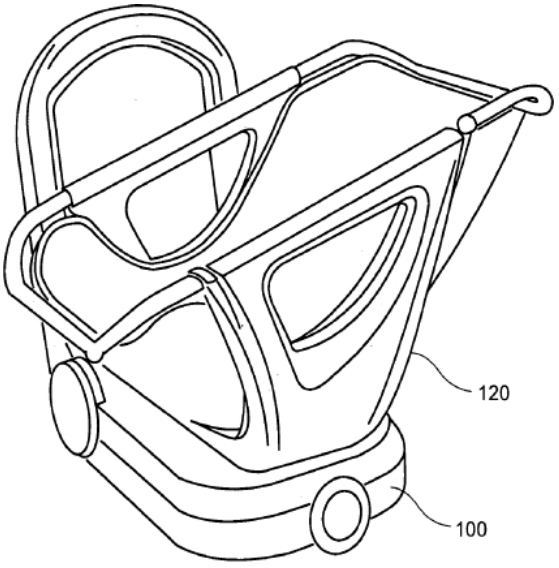

FIG. 4

118. Paragraph [0040] states the following regarding the ability to rotate:

> *"With this engagement mechanism, the seat can be rotated relative to the base and locked in essentially any orientation."*

119. Paragraph [0048] refers to eight possible orientations of a seat element, and paragraph [0049] mentions

"for example, a forward-facing seat with four latches can be made to rotate through 360 degrees but only lock in the forward-facing orientation",

i.e. the 360-degree rotatability of a seat element, with locking in only one orientation (forward-facing orientation).

120. Paragraph [0069] refers to a locking pin:

"In this way, for example, an infant seat 110 (FIG. 1) will lock in the rear-facing orientation. It will be understood that more than one recess 2700 can be used to provide more than one locked position."

121. Paragraph [0077] goes on to explain:

"Here, the symmetry of the shape of the retaining plate 3400 determines how many orientations the seat can be in, relative to the base, when engaging and disengaging. A complete lack of symmetry means that the two can only be engaged and disengaged in one position, whereas the two-fold symmetry of the example in FIG. 34 allows for two positions. For example, with the rear-facing infant seat 110 (FIG. 1), the seat would have to be oriented either 90° clockwise or anti-clockwise from the rear-facing orientation (i.e., facing either passenger door) in order to engage or disengage."

122. Feature M1.3 is not disclosed in a manner prejudicial to novelty in Annex MB 17. A restricted orientation of the second seat element relative to the first seat element is not disclosed directly and unambiguously.

123. The only thing disclosed directly and unambiguously is that, according to Annex MB 17, a 360° rotation is possible. This follows in particular from paragraph [0049], according to which the number of 'locked' positions can be limited, to the extent that only one orientation is possible. No distinction between a first and a second seat element is apparent from MB 17. In [0049] and [0077], reference is made to a seat element merely 'for example'.

124. Consequently, MB 17 does not imply any restricted rotation of a second seat element relative to a first seat element. The respondents seek to infer this from Figures 2 and 3 and the differing geometric relationships shown therein; however, in the Court's view, this cannot be inferred from them, certainly not directly and unambiguously. A restriction on the 'smaller' seat, such that it rotates only to a limited extent relative to the 'larger' seat and not all orientations of the 'larger' seat are possible, follows only if rotational stops are provided. However, the same rotational stops are also possible for the 'larger' seat. MB 17 itself does not directly and unambiguously disclose that such restrictions should be applied only to the 'smaller' seat (second seat element). The fact that, as the respondents argue, the prevention of certain orientations is required for seats for children under

15 months is required under the UN/ECE 129 standard cannot be read into the MB 17 for the purposes of assessing whether it lacks novelty. Contrary to the applicant's view, the reference to a 'desired orientation' in paragraph [0069] is not to be regarded as a direct and unambiguous disclosure.

125. Rather, this could be seen in [0042], where it states: 'In FIG. 2, the seat 110 is in a rear-facing configuration that is recommended for babies and infants. In FIG. 3, the seat 120 is oriented in a forward-facing configuration that is suitable for older children with sufficient neck strength." However, this does not directly and unambiguously pre-empt a restriction on the possible orientations of the second seat element compared with the first seat element. Furthermore, the aforementioned paragraph of MB 17 teaches that other orientations are indeed desirable and should therefore be possible:

> *"Whilst a side-facing orientation may not be desirable in a moving car for safety reasons, it will be appreciated that the ability to choose orientations other than forward- and rear-facing can be quite desirable in other situations, for example, in a parked car, on an aeroplane, and so forth."*

126. The examiner at the European Patent Office also considered the then-current claim 2, which already related to the different rotatability of the two seat elements, to be non-novel in relation to MB17 (US 064), referring in particular to Fig. 1, seats 110 and 120, and paragraphs [0040], [0048], [0049], [0069] and [0077].

127. Furthermore, feature M1.4 is not directly and unambiguously disclosed. This is because the base of US 279 does not feature a rotating element. US 279 discloses only a seat element (seat hub 820) and a base element (base hub 800), as shown in Fig. 2. The seat itself rotates within a recess in the base, as stated in paragraph [0047] of MB 17 and as can be seen from Figs. 8 and 9:

> *"It can be seen that once the two hubs 800, 820 are engaged, the seat hub 820 is free to rotate within the groove 840 of the base hub 800."*

d) <u>Novelty vis-à-vis JPH 051579 U (Annex MB 13):</u>

128. Ultimately, JPH 579 does not, according to the teaching of the patent application, constitute a prior art that would render the invention non-novel.

129. MB 13 discloses a system comprising a base 12, a first seat element (which is shown in Fig. 1 and comprises not only the backrest but also the seat cushion 18; hereinafter referred to simply as the first seat element) and a second seat element in the form of the baby and toddler unit 160. The base 12 can be mounted on a vehicle seat; see paragraph [0017] of MB 13a: *'…is mounted on the rear seat of a vehicle as a seat cushion for the vehicle.'*

130. Figure 1 is reproduced below:

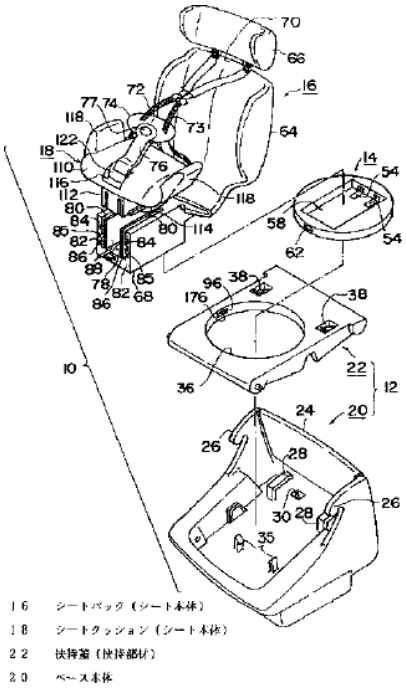

131. The base 12 comprises a grip cover 22 (further referred to in MB 13a as a sandwich cover or cover) with a circular opening 36 (see paragraph [0021] of MB 13a). A rotating cover 14 can be inserted into this opening, which '…is *rotatable within the recess 36 of the base 12*'. When the first seat element is positioned on the turntable 14, it is rotatable together with the turntable 14 (see heading of paragraph [0032] '*Operation of the rotation of the backrest and release from the* turntable' and the last sentence of paragraph [0033]*: 'In this state, the backrest 16 can therefore rotate with the turntable 14*'. The first seat element is therefore rotatable relative to the base 12 within the meaning of feature M1.2 and is mounted on the base.

132. According to paragraph [0059]*, 'depending on the size of the vehicle seat and the baby/toddler unit 160 …* it is *possible to secure the baby/toddler unit 160 beforehand in the cradle position and to the turntable'.* According to paragraph [0053], when the baby unit 160 is used as a baby seat, the seat cushion 172 and the backrest 170 are used in a horizontal position, i.e. in a cradle position, as shown in Figure 12. When the baby-toddler unit 160 is used as a child seat, the seat cushion 172 and the backrest 170 are rotated to form a predetermined angle, as shown in Figure 13, and used in this state.

133. The cradle position is illustrated in Figure 12 as follows:

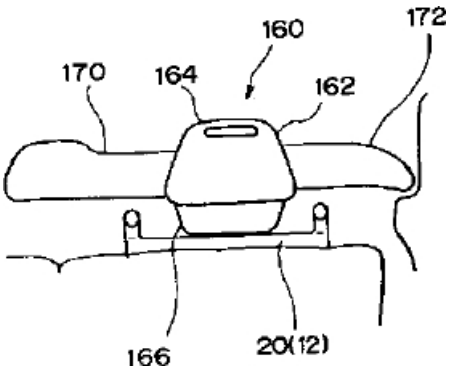

134. Use as a child seat is illustrated in Figure 13 as follows:

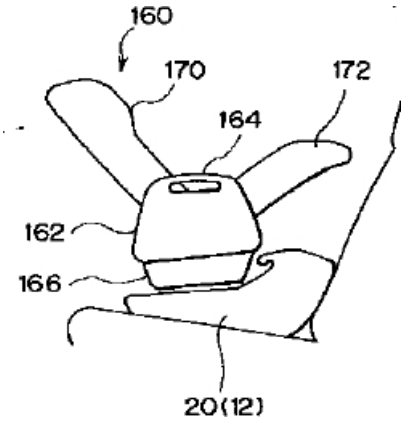

135. Contrary to the respondents' view, feature M1.3 is not directly and unambiguously disclosed in MB 13.

136. The respondents contend that paragraph [0059] and Figures 12 and 13 imply the limited rotation of the baby unit relative to the child seat shown in Figure 1. This argument cannot be accepted. The drawings in Figures 12 and 13 are not dimensioned, so that a direct and unambiguous disclosure, as claimed by the respondents, cannot be inferred from them. It is also far-fetched that a person skilled in the art would conclude from the geometric representation in these figures that the seat is not designed to be rotatable because the vehicle door would be in the way during rotation. The purely schematic representation in the figures cannot be relied upon to support such an interpretation.

137. Nor does the combination of paragraphs [0054] and [0059] of MB 13, relied upon by the respondents, alter this. It is stated there that the locking pin 168 of the baby/toddler unit 160 differs in design from the locking pin 92 of the backrest 16 in that only the locking pin 168 can engage with the upper fixing hole 96 after the baby/toddler unit 160 has been rotated by 90°. In the latter case, according to paragraph [0054], *'the backrest 16 of the child seat* can *only be rotated*'.

138. This does not result in a direct and unambiguous disclosure of a limited rotatability of the second seat element relative to the first seat element.

2. Inventive step:

139. The teaching of the patent application is also inventive.

140. In assessing whether the subject-matter of the claimed version involves an inventive step within the meaning of Article 56 EPC, the general principles established by the Court of Appeal must be applied (UPC_CoA_335/2023, Order of 26 February 2024, Nanostring v 10X Genomics; UPC_CoA_464/2024, Decision of 25 November 2025, Meril v Edwards, UPC_CoA_528/2024, decision of 25 November 2025, Amgen v Sanofi).

141. First of all, it must be determined what the subject-matter of the invention is, i.e. what the objective problem is. This must be assessed from the perspective of a person skilled in the art with their general technical knowledge as at the priority date. This is done by determining what contribution the invention makes in relation to the state of the art, not by considering individual claim features in isolation, but by comparing the claim as a whole in the context of the description and drawings, taking into account the inventive concept (the technical teaching) underlying the invention, which must be based on the technical effects that the person skilled in the art, on the basis of the patent, understands to be achieved by the claimed invention.

142. To avoid a retrospective approach, the objective problem must not contain any references to the claimed solution.

143. The claimed solution is obvious if, on the relevant date, the person skilled in the art, starting from a realistic starting point in the state of the art of the relevant technical field and with the aim of solving the objective technical problem, would have arrived at the claimed solution (and not merely could have arrived at it).

144. A starting point is realistic if its teaching would have been of interest to a person skilled in the art seeking to solve the objective problem on the relevant date. This may be the case, for example, if the relevant document in the state of the art already discloses several features similar to those of the claimed invention and/or addresses the same or a similar underlying problem as the claimed invention.

145. The person skilled in the art possesses neither ‘inventive skill’ nor imagination, and requires a cue or motivation (‘impetus’) which, starting from a realistic starting point, prompts them to take the next

step towards the claimed invention. In principle, a claimed solution is to be regarded as non-inventive or obvious if, on the basis of such a hint or as a matter of routine, the person skilled in the art would not only have been able to take this next step, but would have taken it and thereby arrived at the claimed invention.

146. On the basis of these principles, it cannot be concluded that the teaching of the patent application lacks inventive step.

Lack of inventive step based on MB 17 (US 064):

147. The challenge regarding lack of inventive step, based on US 064 (Annex MB 17), is unsuccessful.

148. As both parties correctly assume, the publication MB 17 (US 064) provides the person skilled in the art with a realistic starting point for the task proposed in paragraph [0003] of the patent application, namely to propose a child seat system which is comparatively flexible in its application and, in particular, allows the orientation of a seat element to be changed in the most reliable and safe manner possible. The prior art document relates to the same technical field and the same basic concept of a modular child seat system comprising a base that remains in the vehicle and several interchangeable seats for different stages of development; see paragraphs [0007], [0039], [0041] and Fig. 1. The seats are detachably connected to the base and can be rotated relative to the base; see paragraphs [0009], [0040], [0045] to [0049], [0069], [0070].

149. However, even taking US 064 as a starting point, a person skilled in the art would not arrive at the solution according to the invention with features M.1.3 and M.1.4.

150. This is because the limited rotation of the second seat element constitutes an inventive contribution. In particular, features M1.3 and M1.4 to M1.4.2 interact. If one selects the solution according to features M1.4 to M1.4.2 with a base capable of rotating about its own axis (or a base comprising a rotating element that is rotatable relative to a base element), then, within the context of a child seat system (as is also the case with MB 17 in the initial context), there must, in principle, be several rotational positions available for the rotating element in which the child is securely accommodated and held by the child seat system (whilst travelling). It is only in combination with feature M1.3 that a flexible and highly safe system is achieved overall, as the components of this system interact in such a way as to prevent certain orientations of the second seat element.

151. Furthermore, a child seat system is the subject of the patent. The focus is not on the isolated consideration of individual claim features, but rather on the contribution that the

invention makes, compared with the prior art, with regard to the claim as a whole in the context of the description and drawings, and taking into account the inventive concept (the technical teaching) underlying the invention.

152. Taking this into account, the person skilled in the art, when consulting MB 17, has no reason to think in the direction of the invention protected by the patent application.

153. The combination of MB 17 and PEN 12 (US 2006/0170262) put forward by the respondents does not lead to a lack of inventive step in the invention as claimed in the patent application, as PEN 12 makes no reference whatsoever to feature M1.3. It is not apparent that the person skilled in the art, starting from MB 17 and drawing on PEN 12, would have had any motivation to realise feature M1.3. The statement in the respondents' rejoinder at paragraph 181

> *'The additionally cited US262 serves in this respect merely to confirm that turntable or rotating element structures at the base for modular child seat systems were common in the art at the priority date. The publication is precisely not required to fundamentally redesign the concept of US 064'*

does not reveal why this should imply a lack of inventive step in the combination of MB 17 and MB 12. Furthermore, MB 17 itself already proposes solutions, namely locking the forward-facing seat only in the forward-facing position and the rear-facing seat only in the rear-facing position. The rotation itself, however, remains unrestricted.

154. As regards feature M1.4, the court also considers the assignment of the rotational structure to the base to be inventive. As previously stated in the discussion on novelty, the invention according to MB 17, as can also be seen from FIG. 2, in contrast to the claimed version, comprises only one seat element (seat hub 820) and one base element (base hub 800), whereby the base element does not comprise a rotating element, but rather the seat itself rotates within a recess in the base, as set out in [0047] of MB 17 and as can be seen from FIG. 8 and 9:

> *"It can be seen that once the two hubs 800, 820 are engaged, the seat hub 820 is free to rotate within the groove 840 of the base hub 800. … A mechanism (not shown) is configured to fully retract the latches 830 so that the seat hub 820 can be removed from the base hub 800."*

155. It is not apparent why, on the basis of MB 17, the person skilled in the art would have any reason to provide, instead, a rotary element corresponding to feature M1.4 of the patent application. No further arguments were put forward on this point during the oral proceedings, despite the court's explicit invitation to present further submissions regarding the question of inventive step.

156. Rather, the court shares the applicant's view that, based on the prior art, the provision of such a rotating element would in fact lead to a more complex structure, which would specifically deter the person skilled in the art from proceeding in this manner.

157. Consequently, the claims in question are not only novel but also involve an inventive step in relation to the prior art.

3. Inadmissible extension

158. Furthermore, it cannot be established that the patent in question has been inadmissibly extended.

159. An inadmissible extension of the subject-matter occurs where the subject-matter of the granted claim goes beyond the content of the application as originally filed. To determine this, the court must therefore first ascertain what information a person skilled in the art, viewed objectively and with reference to the filing date, would immediately and unambiguously derive from the entirety of the application as filed, using their general technical knowledge. In this context, implicitly disclosed subject-matter must also be regarded as part of its content, i.e. that which follows clearly and unambiguously from what is expressly stated (UPC_CoA_762/2024, UPC_CoA_773/2024, decision of 5 November 2025, Viosys v expert).

160. The respondents contend that the rewording set out below, which the applicant made in the claimed version of the claims as compared with the granted version (marked in red below) and in the grant proceedings as compared with the original documents (marked in orange below), is not directly and unambiguously disclosed in the original documents:

	Merkmal lt. geltend gemachtem Hauptantrag
M1.3	wobei eine entsprechende Rotation des zweiten Sitzelementes (11b) gegenüber dem Sockelelement der Basis in einem auf der Basis montierten Zustand zumindest im Vergleich zur Rotation des ersten Sitzelementes (11a) eingeschränkt möglich ist derart, dass beim zweiten Sitzelement zwar verschiedene Ausrichtungen möglich sind, nicht jedoch sämtliche Ausrichtungen, die beim ersten Sitzelement möglich sind
M1.4.2	wobei das Drehelement auf dem Sockelelement rotierbar angeordnet ist derart, dass das Drehelement zusammen mit dem ersten Sitzelement gegenüber dem Sockelelement zur Änderung ~~einer~~ der Ausrichtung des ersten Sitzelementes rotierbar ist,
M1.4.3	wobei das erste Sitzelement von der Basis entfernbar ist.

161. This argument cannot be accepted.

162. Firstly, with regard to features M.1.4. to M.1.4.3 of the claimed version of the claims, it should be noted that the original claim 2 according to WO 2019/053102 (= Annex MB 7) already referred back, in particular, to claim 1. Claim 1 of MB 7 reads:

> 1. Kindersitzsystem, umfassend zumindest ein erstes Sitzelement (11a) und eine, auf einem Fahrzeugsitz anbringbare, Basis (10),
> wobei die Basis (10) ein Sockelelement (13) sowie ein Drehelement (14) aufweist,
> wobei zumindest das Drehelement (14) mindestens eine Befestigungseinrichtung (18a–18d) zur Befestigung des ersten Sitzelementes (11a) aufweist,
> wobei das Drehelement (14) auf dem Sockelelement (13) rotierbar angeordnet ist derart, dass das Drehelement (14) zusammen mit dem Sitzelement (11) gegenüber dem Sockelelement (13) zur Änderung einer Ausrichtung des Sitzelementes (11a) rotierbar ist,
> wobei das Sitzelement (11a) von der Basis (10) entfernbar ist.

163. In this respect, the final feature of the original claim 1 in particular, 'wherein the seat element (11a) is removable from the base (10)', clearly relates to the first seat element (11a) mentioned in claim 1.

164. Since the original claim 2, which refers back in particular to claim 1, in turn mentions the first seat element (with the same reference symbol) and a second seat element, it is disclosed that this first seat element is the first seat element according to claim 1.

165. In this respect, the present combination of features, in particular also concerning the feature whereby the first seat element is removable from the base, can already be derived from the original claims 1 and 2.

166. This also applies to the description (see MB 7, p. 1, last paragraph to p. 2, second paragraph, and p. 4, first paragraph; or MB 9, paragraphs [0004], [0005] and [0013], column 2, lines 57 et seq.).

167. Features M1.4.2 and M1.4.3 are therefore disclosed in the original application.

168. Feature M.1.3 is derived from the original claim 2, which reads as follows:

2. Kindersitzsystem, insbesondere nach Anspruch 1, umfassend zumindest ein erstes Sitzelement (11a), ein zweites Sitzelement (11b) und eine, auf einem Fahrzeugsitz anbringbare, Basis (10),
wobei zumindest das erste Sitzelement (11a) gegenüber der Basis (10) oder einem/dem Sockelelement (13) der Basis (10) von einer ersten Ausrichtung in eine zweite, von der ersten Ausrichtung abweichende, Ausrichtung rotierbar ist,

wobei eine entsprechende Rotation des zweiten Sitzelementes (11b) gegenüber der Basis (10) verhindert ist oder zumindest im Vergleich zur Rotation des ersten Sitzelementes (11a) eingeschränkt ist.

169. Feature M.1.3 is disclosed in the original claim 2 with regard to the restricted rotation of the second seat element.

170. Feature M.1.3, which explains the restricted rotation as 'such that, whilst various orientations are possible for the second seat element, not all orientations possible for the first seat element are possible', is also to be regarded as disclosed in the original claim.

171. This is because the relevant part of the sentence in feature M.1.3 constitutes a clarification and also a restriction of the restricted rotation of the second seat element already contained in the original claim 2. The fact that restricted rotation relative to the first seat element means that not all orientations possible with the first seat element are possible is to be regarded as disclosed in the original disclosure. This is particularly so in view of paragraph [0014] of the original disclosure, Annex MB 9, which states:

> 'Preventing the rotation of the second seat element means that this seat element can only be mounted on the base in one (single) orientation. A restriction on rotation (compared to the first seat element) means that, whilst the second seat element can be mounted on the base in various orientations (for example, in a rear-facing orientation and in an orientation at least approximately at a 90° angle to it), but not in all the orientations possible with the first seat element (whereby the first seat element can then, for example, be configured in a rear-facing orientation, a forward-facing orientation and, where applicable, an orientation approximately perpendicular to these). In a specific embodiment, therefore, the first seat element can, for example, be mounted in both a forward-facing and a rear-facing orientation, whilst the second seat element cannot, at least, be mounted in a forward-facing orientation."

172. The claimed version as set out in the main claim therefore does not go beyond the original disclosure; no inadmissible extension is apparent.

VI. NECESSITY OF AN INJUNCTION

173. Pursuant to Article 62(2) of the EPGÜ and Rule 211.3 of the Rules of Procedure, it is within the court's discretion to weigh up the interests of the parties against one another and, in particular, to take into account the potential

damage that might be incurred by one of the parties as a result of the application being granted or dismissed. In doing so, the court must take into account not only the damage to one of the parties, but also the time factor. In particular, the court must assess whether proceedings on the merits can be awaited or whether interim measures are necessary (EPG-BerG, UPC_CoA_540/2024, Order of 24 February 2024, Biolitec v Light Guide, para. 19). In this regard, Rule 206.2(c) of the Rules of Procedure requires the applicant to set out in their application the reasons why interim measures are necessary to prevent an imminent infringement, to prohibit the continuation of an alleged infringement, or to make such continuation conditional upon the provision of security. This concerns the merits of the application for interim measures and must be taken into account by the court when issuing an order pursuant to Rule 211 of the Rules of Procedure (EPG-BerG, UPC_CoA_540/2024, Order of 24 February 2024, Biolitec v Light Guide, para. 20, with reference to UPC_CoA_335/2023).

174. In the present case, the applicant cannot reasonably be expected to await the outcome of proceedings on the merits. Whilst it is undisputed that the 'base curv' system has been available on the market since early 2025, meaning that the competitive situation has existed for over a year and there are other suppliers on the market, there are circumstances which make it unreasonable for the applicant to wait until a decision is reached in the main proceedings. For, regardless of the question—which is the subject of heated debate between the parties—as to whether or not a fall in prices occurred as a result of the respondents' entry into the market, the fact that these are durable products which meet the total needs of a child for the first four years of life constitutes a compelling circumstance justifying a decision in summary proceedings. The families with children in question can no longer be reached by the claimant to meet the needs of their child, who is already using the respondents' seating system, and, where applicable, nor to meet the needs of any subsequent sibling. At the same time, the respondent remains free to market the 'base next' systems.

175. They face no risk of harm beyond that which is the normal consequence of an injunction. This applies in particular given that the Local Chamber is not imposing a so-called absolute ban, but is merely imposing a ban on the individual seat elements – all of which can also be used without the 'base curv' base system – and on the 'base curv' base system itself, subject to an obligation to provide information. The impact on the respondents is limited in this respect, which, when weighing up the interests involved, further supports the issuance of an injunction of this nature in proceedings for interim measures.

176. Nor is there any doubt as to the urgency of the matter.

177. Pursuant to Rule 211.4 of the Rules of Procedure, the Court must take into account any undue delay on the part of the applicant in applying for interim measures. Whether there has been an undue delay within the meaning of Rule 211.4 of the Rules of Procedure depends on the

circumstances of the individual case (EPG-BerG, UPC_CoA_182/2024, order of 25 September 2024, Mammut Sports v Ortovox).

178. In this specific case, urgency is certainly established, as the patent in question was not granted until 18 March 2026. The applicant subsequently acted swiftly, carrying out a test purchase and filing the application for an injunction within just under a month of the patent being granted, on 20 April 2026. The applicant cannot therefore be accused of any delay.

VII. LEGAL CONSEQUENCES

179. The court therefore concludes that it is more likely than not that the disputed patent is being infringed by the offering for sale and distribution of the contested embodiments.

180. Since the granting of interim measures is necessary both in terms of timing and substance, and since the balancing of interests also favours the applicant, the court exercises its discretion (R. 209.2 VerfO) and orders the requested interim measures in accordance with Article 62(1) and Article 25(a) of the EPGÜ. Only an interim injunction takes account of the applicant's interest in the effective enforcement of the disputed patent. As a rule, interim injunctions extend to the field of those CMS to which the patent applies, unless specific circumstances justify an exception (Article 34 UPCA, UPC Court of Appeal judgment of 30 April 2025, UPC_CoA_768/2024, APL_64374/2024 – Insulet v EOFlow).

181. As the conditions for ordering a provisional measure are met, the applicant's claims for an injunction and for disclosure must be granted. As requested by the applicant, with regard to the indirect patent infringement arising from the fact that the individual seat elements can also be used without infringing the patent, without the
'base curv', no absolute prohibition has been issued; instead, a duty to provide information has been imposed as a less onerous measure, which prevents the seating elements in question

- 'cari next' carrycot
- child seats 'pipa lite', 'pipa next', 'arra flex' and 'todl next' from

being used in conjunction with the 'base curv' base system.

182. The 'arra next' seat unit is not covered by the injunctions – neither with regard to the absolute prohibition nor with regard to the duty to provide information – nor by the order to provide information, as, according to the facts of the case accepted by the Local Chamber, this seat unit is not compatible with the 'base curv' base system.

183. The application for the provision of information is well-founded.

184. Under Article 67 of the EPGÜ, the court may, upon a reasoned application by the applicant that complies with the principle of proportionality, order the infringer, in accordance with the Rules of Procedure, to provide the applicant with the information requested in the application. The disclosure may also be ordered in the context of an application for interim measures, provided that there is an urgent interest in doing so and the measures are proportionate (CoA, UPC_CoA_382/2024, Order of 14 February 2025, Abbott v Sibionics).

185. This is the case here: The applicant has a substantial and urgent interest in the requested information regarding the origin and distribution channels of the infringing child seat systems (including the full names and addresses of the legal entities involved), as well as the identity of all third parties involved in the manufacture or distribution (including the full names and addresses of the legal entities involved), so that it may take appropriate measures to prevent further patent infringements by third parties.

VIII. THREAT OF A PENALTY PAYMENT

186. The requested threat of a penalty payment is justified.

187. Pursuant to Article 63(2) of the EPGÜ and Rule 354.3 of the VerfO, the court's order may provide for repeated penalty payments payable to the court in the event that a party fails to comply with the provisions of an order. The amount is to be determined by the court in light of the significance of the order in question.

188. The penalty payment of up to EUR 250,000 for each individual instance of non-compliance – which is imposed on a recurring basis in the event of non-compliance – is appropriate given the significance of the case and the amount in dispute of EUR 550,000. It also falls within the range set by the Court of Appeal (UPC_CoA_2255/2025 – Dyson v Dreame et al). Above all, however, this is merely the upper limit of a range which enables the court to set a lower penalty payment within that range in a flexible manner tailored to the individual case.

189. The court considers the requested penalty payment of EUR 2,500 per day on which the request for information is not complied with to be appropriate to ensure compliance with this request, particularly as it is intended to reliably deter the debtor from future breaches and infringements and fulfils a coercive and punitive function (breach of the court injunction). The amount is also in line with the case law of the Court of Appeal (order of 14 October 2025, UPC_CoA_699/2025, Kodak v Fujifilm).

IX. VALUE OF THE CLAIM

190. The value of the claim of EUR 550,000, which the applicant considers appropriate, appears reasonable. The value of the claim has not been contested. It is therefore set by the court at EUR 550,000.

X. PROVISIONAL REIMBURSEMENT OF COSTS:

191. The application for provisional reimbursement of costs is well-founded.

192. The applicant seeks provisional reimbursement of costs pursuant to Rule 211.1(d) of the Rules of Procedure in an amount equal to half of the upper limit of EUR 112,000 (based on the estimated value in dispute of EUR 550,000), namely EUR 56,000. Although the respondents have contested the application on both its merits and the amount claimed, according to the case law of the Court of Appeal, the Court may, pursuant to Article 69(1) of the EPGÜ and Rule 150.2 of the Rules of Procedure, award the successful party provisional reimbursement of costs in respect of legal representation costs for the proceedings in question. As a rule, this amounts to 50 per cent of the upper limit for recoverable costs set by the Administrative Committee in accordance with Rule 152.2 of the Rules of Procedure (CoA, UPC_CoA_898/2025, Order of 27 March 2026, Onward v Niche Biomedical, para. 184). In the present case, the applicant's claim appears to the Court to be reasonable and appropriate.

XI. DECISION ON COSTS:

193. A decision on costs is also justified in interim proceedings (Order of 21 February 2025, ORD_68880/2024, UPC_CFI_701/2024; Order of 26 June 2024, ORD_38032/2024, UPC_CFI_124/2024). It is also in line with the view of the Court of Appeal (Order of 3 March 2025, UPC_CoA_523/2024 – Sumi Agro v Syngenta; Order of 6 August 2024, UPC_CoA_335/2024, 10x Genomics et al. v NanoString), that a decision on costs should be made in inter partes proceedings concerning interim measures, as this concludes the proceedings.

194. In accordance with the outcome of the proceedings, whereby the applicant's claims were largely upheld (only with regard to the 'arra next' seat element could the applicant's claims not be upheld, as, according to the compatibility overview, it is not compatible with the 'base curv' base system), 90 per cent of the costs are to be borne by the respondents and 10 per cent by the applicant.

XII. SECURITY:

195. No security deposit is to be ordered in the present case.

196. In principle, the court may order the applicant to provide adequate security to ensure that, should the court set aside the interim injunction, compensation may be paid to the respondent for any loss they are likely to suffer (Rule 211(5) of the Rules of Procedure; Article 60(7), Art. 62(5) EPGÜ).

197. In the present case, there is no need to order the provision of security. Firstly, the respondents' assertion that they face damage 'amounting to a double-digit million sum' is not only unsubstantiated but also incorrect for the simple reason that they may continue to use the individual child seats as well as the base system on their own, subject to the imposed duty to provide information.

198. Furthermore, it has not been demonstrated that the enforcement of any claims for damages against the applicant – a German company belonging to a group listed on the Hong Kong stock exchange – would encounter serious difficulties. It is apparent from Annex PEN 17b that the Hong Kong-based company recorded a profit of HK$ 187.3 million in the first half of 2024. Even if, as indicated in the aforementioned warning, this profit were to have fallen by 40–50 per cent in the first half of 2025, there are no indications of potential insolvency (see EPG-BerG, UPC_CoA_382/2024, order of 14 February 2025 – Abbott v Sibionics).
[298] V. [299].

XIII. SECURITY FOR PREVENTION:

199. Nor is it appropriate to order security to prevent further infringement in the present case.

200. Article 62(1) of the EPGÜ explicitly mentions, as a less onerous measure, the possibility of making the continuation of the infringement conditional upon the provision of security to ensure compensation for the right holder.

201. However, in the Court's view, it is not necessary to restrict the enforcement of the injunction by imposing a security for compliance. The applicant, as the right holder, suffers considerable detriment as a result of further acts of infringement. This is not counterbalanced by any equally weighty interest on the part of the infringing respondents that would justify refraining from enforcing an injunction in the absence of security to prevent further infringement.

ORDER

I. The respondents are each ordered to

1. to cease, within the territory of the Kingdom of Belgium and/or the Republic of Bulgaria and/or the Kingdom of Denmark and/or the Federal Republic of Germany and/or the

Republic of Estonia and/or the Republic of Finland and/or the French Republic and/or the Italian Republic and/or the Republic of Latvia and/or the Republic of Lithuania and/or the Grand Duchy of Luxembourg and/or the Republic of Malta and/or the Netherlands and/or the Republic of Austria and/or the Portuguese Republic and/or the Republic of Romania and/or the Kingdom of Sweden and/or the Republic of Slovenia,

child seat systems comprising at least a first seat element, a second seat element and a base mountable on a vehicle seat, wherein, when mounted on the base, at least the first seat element is rotatable relative to a plinth element of the base from a first orientation into a second orientation differing from the first orientation, whereby a corresponding rotation of the second seat element relative to the base element of the base, whilst mounted on the base, is possible to a limited extent at least in comparison with the rotation of the first seat element, such that, whilst various orientations are possible for the second seat element, not all orientations possible for the first seat element are possible,

wherein the base further comprises a rotary element, the rotary element comprising at least one fastening device for securing the first seat element, the rotary element being rotatably mounted on the plinth element such that the rotary element, together with the first seat element, can be rotated relative to the plinth element to change the orientation of the first seat element, wherein the first seat element is removable from the base,

offering, placing on the market or using it, or importing or possessing it for these purposes,

2. and, furthermore, to refrain from

a first seat element; or a second seat element; or a base mountable on a vehicle seat; or a combination of the first and second seat elements; or a combination of the first seat element and the base; or a combination of the second seat element and the base

in particular one of the seat elements ‘todl next’, ‘pipa lite’, ‘pipa next’, ‘arra flex’ or ‘cari next’; or the child seat base system ‘base curv’,

to customers within the territory of the Kingdom of Belgium and/or the Republic of Bulgaria and/or the Kingdom of Denmark and/or the Federal Republic of Germany and/or the Republic of Estonia and/or the Republic of Finland and/or the French Republic and/or the Italian Republic and/or the Republic of Latvia and/or the Republic of Lithuania and/or the Grand Duchy of Luxembourg

and/or the Republic of Malta and/or the Netherlands and/or the Republic of Austria and/or the Portuguese Republic and/or the Republic of Romania and/or the Kingdom of Sweden and/or the Republic of Slovenia

to offer and/or supply,

where these are suitable for use in

a child seat system comprising at least a first seat element, a second seat element and a base mountable on a vehicle seat, wherein, when mounted on the base, at least the first seat element is rotatable relative to a plinth element of the base from a first orientation into a second orientation differing from the first orientation, whereby a corresponding rotation of the second seat element relative to the base element of the base, whilst mounted on the base, is possible to a limited extent at least in comparison with the rotation of the first seat element, such that, whilst various orientations are possible for the second seat element, not all orientations possible for the first seat element are possible,

wherein the base further comprises a rotary element, the rotary element comprising at least one fastening device for securing the first seat element, the rotary element being rotatably mounted on the plinth element such that the rotary element, together with the first seat element, can be rotated relative to the plinth element to change the orientation of the first seat element, wherein the first seat element is removable from the base

without, when offering the product to customers in the advertisement and upon delivery, expressly and prominently stating that the first seat element, the second seat element and the base, which can be fitted to a vehicle seat, may not be used together in the child seat system with the aforementioned features without the consent of the applicant as the proprietor of EP 4 242 056 B1

in particular without

- to state explicitly and prominently, both in the product description and upon delivery of the ‘base curv’ base system, that the base system must not be used in conjunction with any of the ‘todl next’, ‘pipa lite’, ‘pipa next’ or ‘arra flex’ child seats, or the ‘cari next’ without the consent of the applicant, as the holder of EP 4 242 056 B1.

- to state explicitly and prominently in the offer and upon delivery of any of the seat elements ‘todl next’, ‘pipa lite’, ‘pipa next’, ‘arra flex’ or ‘cari next’

that the seat element in question must not be used in conjunction with the child seat base system
'base curv' without the consent of the applicant, as the proprietor of EP 4 242 056 B1.

3. to pay to the court a recurring penalty payment of up to EUR 250,000 for each individual instance of non-compliance with the orders set out in points 1 and 2, which shall be set (and, where applicable, revised) by the Hamburg Local Chamber at the applicant's request,

4. to submit to the applicant, within four weeks of service of the order issued in this matter, a written statement supported by appropriate documentation and containing the following information:
   - the origin and distribution channels of the products referred to in points I.1 and I.2 that have been procured since 18 March 2026 in the specified territories (including the full names and addresses of the legal entities involved);
   - the quantities of the products referred to in sections I.1 and I.2 that have been delivered, received or ordered in the specified territories since 18 March 2026; and
   - the identity of all third parties who, since 18 March 2026, have been involved in the manufacture or distribution of the products referred to in sections I.1 and I.2 within the specified territories (including the full names and addresses of the legal entities involved).

5. to pay a daily penalty of €2,500 to the court for each day on which they fail to comply with the order under 4., which shall be set (repeatedly, if necessary) by the Hamburg Local Chamber at the applicant's request,

II. The respondents are ordered, as jointly and severally liable parties, to reimburse the applicant provisionally for costs amounting to 56,000 euros.

III. The value in dispute is set at EUR 550,000.

IV. The respondents shall bear 90 per cent of the costs of the proceedings, and the applicant 10 per cent.

V. This order is immediately enforceable.

VI. In all other respects, the claimant's claims are dismissed.

INFORMATION ON THE APPEAL

Both parties may appeal against this order within 15 days of its service (Art. 73(2)(a), 62 EPGÜ, R. 220.1(c), 224.2(b) VerfO).

INFORMATION ON ENFORCEMENT (ART. 82 EPGÜ, ART. 37(2) EPGS, R. 118.8, 158.2, 354, 355.4 VERFO):

A certified copy of the enforceable decision or the enforceable order shall be issued by the Assistant Registrar at the request of the enforcing party, Rule 69 of the Rules of Procedure.

Sabine Klepsch, Presiding Judge	SABINE MARIA KLEPSCH Digitally signed by SABINE MARIA KLEPSCH Date: 7 August 2026 17:17:48 +02'00'
Dr Stefan Schilling legally qualified judge	STEFAN SCHILLING Digitally signed by STEFAN SCHILLING DN: cn=STEFAN SCHILLING, c=DE, email=stefan.schilling@unifiedpatentcourt.org Date: 7 August 2026 17:13:56 +02'00'
Thomas Adocker legally qualified judge and rapporteur	Thomas Adocker Digital signed by Thomas Adocker Date: 7 August 2026 16:05:49 +02'00'
On behalf of the Deputy Registrar	Digitally signed Carolin Ewers 10 August 2026 08:46:05 +0200 Unified Patent Court Einheitliches Patentgericht Juridiction unifiée du brevet